Low Friction Feeder of Enhanced Specular Reflector Material for CMS Detector

Anthony Antoine, Brandyn Jay, Joshua Song
Nicholas Pohlman Ph.D., Iman Salehinia Ph.D.

Mechanical Engineering, Electrical Engineering

NORTHERN ILLINOIS UNIVERSITY
College of Engineering and Engineering Technology

Abstract

With significant advancements in the field of particle physics, continuous upgrades to the sensors and machines used are necessary. One of those upgrades is the manufacturing of scintillator tiles for the CMS detector, which requires the punching and folding of 3M enhanced specular reflector (ESR) material. Feeding the material into the die punch manually for thousands of tiles can prove to be a daunting, time consuming task. Significant automation of the task can realize cost savings in both time value and reduction of waste.

Introduction

Scintillator tiles are small plastic tiles that, when particles are passed through, produce light. The light produced can be measured to investigate properties of the particle. These tiles are wrapped with a reflective material (ESR) which helps contain the light for measuring. ESR material, produced by 3M, requires great care when handling to avoid damage through abrasion, creasing, or contamination with dirt or oil. In designing the feeder machine, avoidance of damage, significant automation, and sufficient feed rate were strong requirements.

Mechanism Design

A suction-based pick and place system was found to be the optimal design for meeting all design requirements while remaining relatively low cost, by avoiding high cost of labor for manufacturing and high cost of material for manufacturing. Aluminum extrusions were used for the frame and translation systems. Soft materials were chosen for all touch points, including silicone and neoprene.

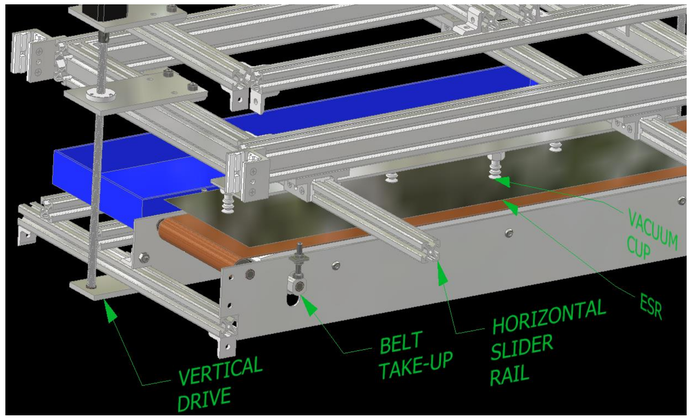

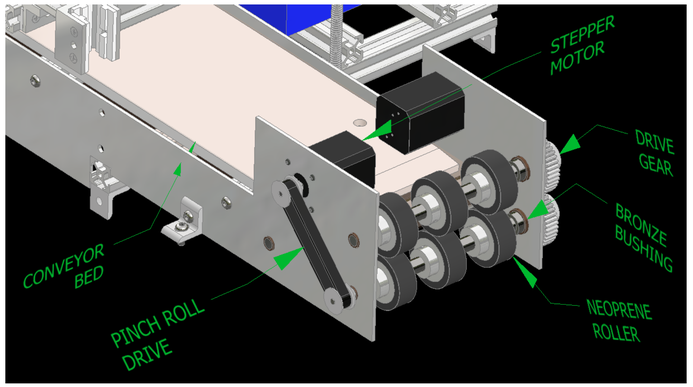

Controls/Electrical Design

Failure points and safety are of key importance for machines handling delicate things. Sensor and electrical design centered around the detection/prevention of failure in both suction and carry systems, using high torque 65 N.cm NEMA 17 stepper motors to drive the system and infrared sensors for detection of failure in picking up strips or jamming of the conveyor. A solenoid and regulator were used to control suction force to avoid bending of the ESR.

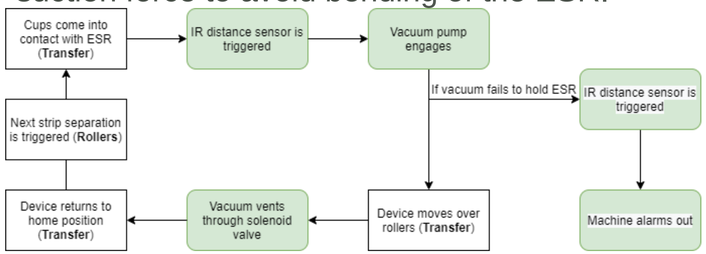

Conclusion

Creating a machine which aids in automatic production of thin, delicate sheets requires careful systems design and part integration. The suction-based pick and place along with the belt conveyor aid in meeting all design requirements.

Acknowledgements

We would like to express gratitude toward Dr. Nicholas Pohlman, Dr. Iman Salehinia, Gerald Smith, Mike Reynolds, NIU Physics Dept., NIU College of Engineering, and F.N. Smith Corp.