Robotic Human Nose Simulator

Jacob Martinez, Joseph Panzica, James Vonderhaar
Dr Angela Dixon

Biomedical Engineering and Mechanical Engineering

NORTHERN ILLINOIS UNIVERSITY
College of Engineering and Engineering Technology

Abstract

The robotic human nose simulator is a novel device that accurately simulates human breathing patterns. The motivation for the project is to aid researchers by giving accurate models of the dispersal of particles, harmful or harmless, in a detailed human nasal cavity by way of a piston driven breathing system. The piston drives air through a 3D printed cast of the upper respiratory system, taken from a CT scan of a cadaver and split into slides.

Introduction

The purpose of creating a robotic nose simulator is to accurately model and simulate airflow through the upper respiratory system, with the ability of detecting and collecting nanoparticles for the purpose of researching their effects on said system. A 3D-printed, accurate-to-human cast of the nasal cavity with accurately simulated airflow could be used in a biohybrid model for assessing air quality, drug delivery research, healthcare, and a multitude of other practices. In harmful environments such as warzones, factories, mines, and sewers, little is known about the health effects the air quality has on the respiratory system of persons in the area, so a device that closely mimics a human's respiratory system could help reduce these negative effects.

Methods and Materials

The piston was constructed of PVC pipe and connected to the cast made of resin through a base similarly made of resin. The whole system has a wooden frame holding everything up and in the correct positions, as well as reinforcing where necessary.

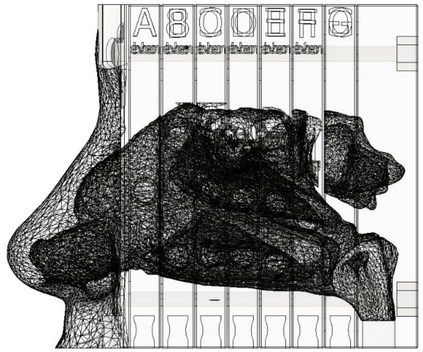

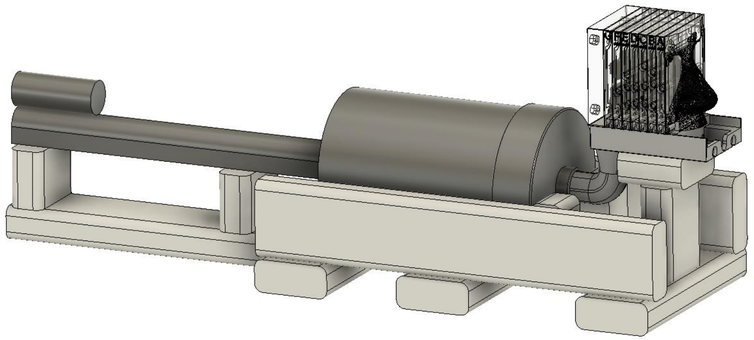

Results

The device has been tested to ensure that all components were functional, and the device was able to operate reliably. To accomplish this test, the actuator was operated with our control system.

Conclusions

Airborne nanoparticles are present in the daily lives of many persons. Military-relevant scenarios drive the need to analyze and research how possibly harmful these situations are. Nanoparticles released during manufacturing or from explosions pose a great risk to those restricted to those environments. This device would allow for a simple and cost-effective way to figure out what might be affecting an area and to allow for proper treatment and prevention to take place.

Acknowledgements

Special thanks to Dr Angela Dixon for her guidance and the initiation of the project, the staff of the NIU Maker Space for their help with initial printing, and Ian Gilmour for printing the nasal cast parts in high quality with his own 3D printer.