Rock Valley Roasters

Ryan Sievert, Andrew Hastings, Luke Freeman
Dr. Ghazi

Mechanical Engineering

NORTHERN ILLINOIS UNIVERSITY
College of Engineering and Engineering Technology

Abstract

The goal of this project is to design and implement a low cost, effective coffee roaster with an innovative design of combining the heating and cooling drums into a one-piece design. This one-piece design will save material, bringing down the overall manufacturing cost and market price. Addimg a touchscreen as the user interface allows the user to set roasting cycle, followed by a cooling cycle while also numerically and graphically displaying roasting data.

Introduction

Traditional coffee roasters have not seen changes to their design since the 19th century. Rock Valley Roasters aims to change that design by heating and cooling within the same drum.

Methods and Materials

The roasters code is written in Python and using TKinter for the GUI. The GUI is operated on a 7in resistive touch screen and has operator inputs for rotation speed, and air flow. all portions of the roaster that touch the coffee beans are made of 304 SS. The beans are nested within the drum and turned by 6 skewed paddles for even roasting this is operated by an onboard motor and pulley system governed by the Raspberry Pi.

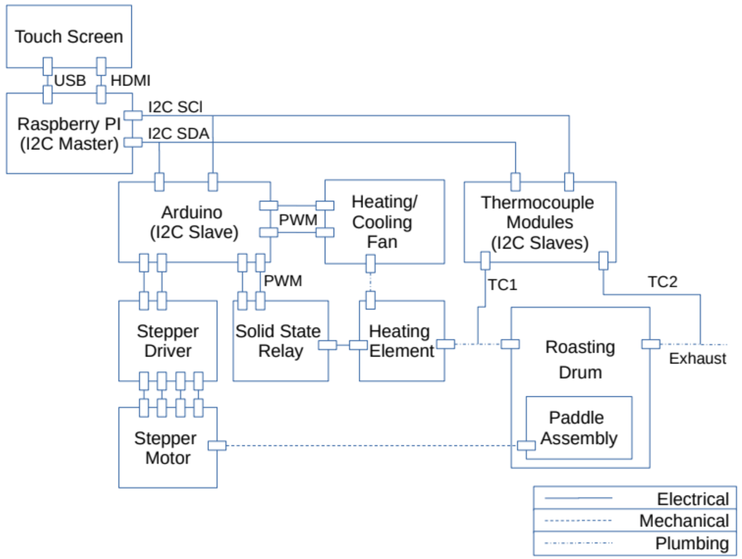

Results

The result of the last 9 months of decication was making a working roaster prototype. A second result are ideas for a second prototype for the future and then soon after a production unit.

Discussion

Q: Is a Rock Valley Roaster user-friendly?
A: Of course! Rock Valley Roaster's custom GUI is held on a single 7in touchscreen for easy use.
Q: Is a Rock Valley Roaster food-safe and FDA approved?
A: Rock Valley Roasters are made of 304 Stainless Steel and built to meet FDA regulations making them food safe by FDA standards.

Conclusions

Rock Valley Roaster's innovative design of a single drum coffee roaster will create a change in the market. The all-in-one system will allow users to provide a quality product to their customers. As much as this system is designed for coffee houses, this system can be used for your do-it-yourself for coffee connoisseur. This will allow people to provide an independent coffee that cannot be purchased from your local store or coffee house. These people then can share their coffee with friends and family.

Acknowledgements

The team would like to acknowledge Dr. Ghazi, Sonali Rawat, Dana Sievert, Eileen Newcomer, Michael Lawson, Lars Freeman, and Jeff Goode