Fluid Power Vehicle Challenge

Jason Fidder[1], Trey Fry[1], Grant Heckel[1]
Advisors: Ghazi Malkawi[1], Sandhya Chapagain
National Fluid Power Association

[1]Mechanical Engineering

NORTHERN ILLINOIS UNIVERSITY
College of Engineering and Engineering Technology

Abstract

The Fluid Power Vehicle Challenge (FPVC) is an annual competition organized by the National Fluid Power Association (NFPA) in which teams from different universities compete to build a vehicle based on fluid power. The vehicle requires the use of hydraulics and pneumatics where the designed vehicle will be judged based on the vehicle's efficiency, speed, and endurance.

Introduction

The FPVC focuses on vehicle design, electro-hydraulic/pneumatic system design, and controls programming. It requires the designing of an electro-hydraulic system, storing energy during vehicle operation, then utilizing that stored energy to drive the vehicle. Propulsion is accomplished through hydraulics with human power serving as the prime mover in the system. To incorporate pneumatics, a parking brake is applied to the system.

Methods and Materials

A recumbent trike was selected for the frame of the vehicle. The gear-pump linkage is located below the pedals and serves to convert human power into mechanical energy in the system.

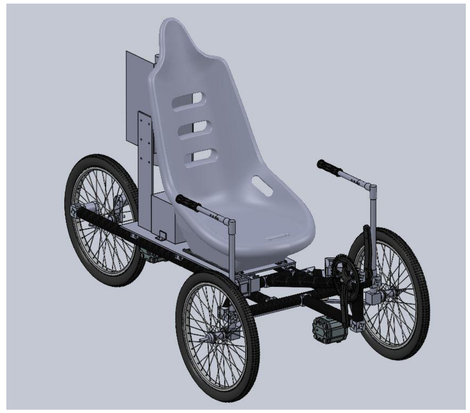

The pump-motor linkage drives the vehicle as long as human power is activating the pump. When the operator stops pedaling, the fluid flow is directed to the accumulator to be stored as energy to be discharged at a later use.

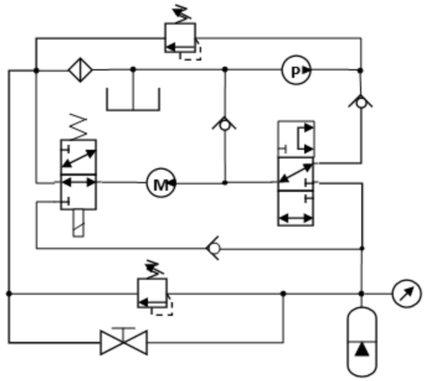

Discussion

Although the design is achieved mainly through hydraulics, pneumatics and electronics were a key feature in making the design function. Pneumatics were essential in making the parking brake that ensures the bike is fixed to its location when the operator is not on the bike. Electronics, in this design, allows for the operator to actuate and engage certain aspects of the hydraulic circuit by flipping a switch. A controller is used to monitor fluid charge in the system.

Conclusions

As the first team from NIU to participate in the FPVC, the team believes they have created a solid vehicle for the competition. The vehicle functions as expected, and although the vehicle may not take first place in the competition, the team is confident their design will prove to be a useful stepping stone toward better vehicles in the future of this competition for the university.

Acknowledgements

We would like to thank Northern Illinois University for their full support over the challenging and unprecedented semester. We would like to thank our industry mentor Bruno Risatti for the guidance on this project. Also, thanks to Dr. Peterson, Dr. Malkawi, Sandhya Chapagain, and Stephanie Scaccionoce of the NFPA for working closely with us in the course.