Miniature, Lightweight, Unnoticeable Hearing Aid

Selina Cervantes, Pedro Hernandez, Rakshil Soni
Dr. Mohammad Moghimi

Electrical Engineering and Electrical Engineering

NORTHERN ILLINOIS UNIVERSITY
College of Engineering and Engineering Technology

Abstract

Conductive hearing loss is a common defect in infants and younger children that can occur at birth or in later years. Conductive hearing loss involves physical deformation of the outer and middle portions of the ear. If hearing loss is not resolved within a few days after being discovered, the infant may have trouble in developing language, speech, and communication skills throughout their life. The current solutions for conductive hearing loss include bone-anchored and cochlear implanted hearing aids. The problem with these devices is that they require invasive procedures such as surgery or implantable aid, which is not an ideal method to be carried out on newborn infants and younger children. The purpose of this device is to create a non-invasive solution for conductive hearing loss that is suitable for infants and young children.

Introduction

In conductive hearing loss a blockage forms at the outer portion of the ear due to a birth deformation or an infection. The blockage prevents sound waves from reaching the middle and inner ear. Sound waves travel into the outer section of the ear and continue to flow into the middle and inner portion where the Tympanic membrane exists. The Tympanic membrane vibrates in response to these waves. If it can not vibrate, the child can not hear, or the sound will become extremely muffled.

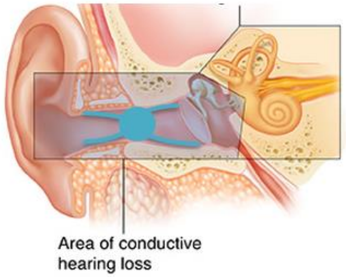

Figure 1: Common area for conductive hearing loss

Methods/Results

The design for this project is a miniature device that has a strip like form factor that sits on the hairless portion of skin behind the user's ear which emulates the functionality of typical bone-anchored and cochlear implanted hearing aids without the need for any invasive procedures. The uniqueness of this device is that using a piezoelectric actuator the device will be able to vibrate the skull and send signals to the inner ear which will be perceived as sound, making the device safe for children as it requires no invasive procedures. The focus of this project is to prove this concept by designing a larger scaled prototype of the ideal hearing aid design to show that the ideal design can in fact be achieved through further research and development. The main components for this device include a micro-electromechanical systems (MEMS) microphone, piezoelectric actuator, breadboard, and other necessary electronic components (resistors, capacitors, etc.) to fulfill the design needs for the project. The flowchart in Figure 2 shows an overview of the device's functionality.

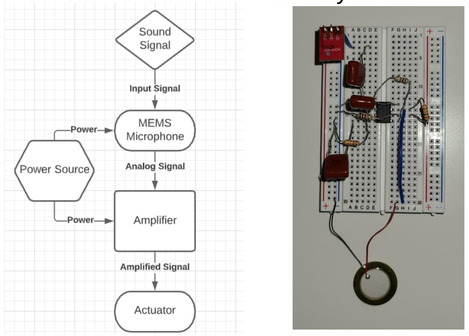

Figure 2: Flowchart and image of device

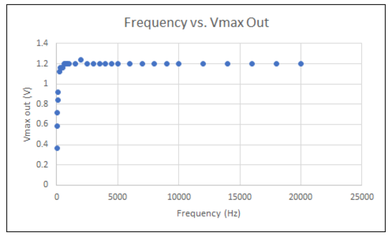

Figure 3: Results from testing device

Discussion

An experiment that was run involved testing the device with the MEMS microphone and the PE actuator connected. In this test it was observed that when speaking into the microphone the vibrations created by the PE actuator do in fact correspond to the audio signal being inputted. The chosen actuator has a small radius and is thin. This actuator would have a resonance frequency below 1kHz in order to encompass the most common noises and was driven by the circuit used for the device. Dampening of the actuator was considered when deciding the final prototype actuator.

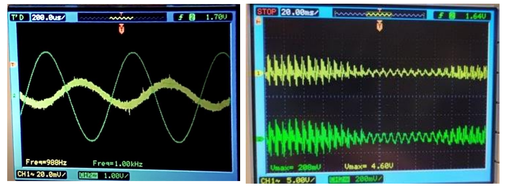

Figure 4: Results from experiments

Conclusion

The next step to improve the device would be to fabricate the circuit and try to package the device in a smaller form factor which allows the device to be tested on individuals to see if the vibration signals are producing a strong enough signal for the individual to hear. Along with that the device needs to be tested with a battery device such as a flexible battery as the external power source being used in this prototype is obviously not miniaturized for the final design. This prototype has provided the proof of concept for future research and development.

Acknowledgements

Members of this group would like to thank faculty mentor and client, Dr. Mohammad J. Moghimi and TA, Sandhya Chapagain for their support and guidance through this project. The group would also like to thank Mr. Edward Miguel for allowing the group to work in his lab and help us with our circuit design needs.