Hydraulic & Pneumatics of a Fluid Power Vehicle

Fluid Power Vehicle Challenge

Jason Fidder, Trey Fry, Grant Heckel

Department of Mechanical Engineering

Northern Illinois University

Dekalb, IL, 60115

***Abstract*—The Fluid Power Vehicle Challenge (FPVC) is a yearly competition organized by the National Fluid Power Association (NFPA) in which teams from different universities compete to build a vehicle based on fluid power. The vehicle requires a use of hydraulics and pneumatics where the designed vehicle will be judged based on the vehicle's efficiency, speed, and endurance. The team will be given a budget from sponsors in the industry including Iowa Fluid Power, SunSource, Norgren, and an additional budget from Northern Illinois University (NIU). The project includes a collaboration with two teams where one will focus on the hydraulic and pneumatics of the vehicle while another team focuses on the frame of the vehicle.**

Keywords-component; hydraulics; pneumatics; circuit;

I. INTRODUCTION

The FPVC focuses on vehicle design, electro-hydraulic/pneumatic system design, and controls programming. It requires the designing of an electro-hydraulic system, storing energy during vehicle operation, then utilizing that stored energy to drive the vehicle. Propulsion is accomplished through hydraulics with human power serving as the prime mover in the system. To incorporate pneumatics, a parking brake is applied to the system. The frame team has selected a three-wheel carbon-fiber frame, with pedals to generate mechanical energy. The goal is to create a safe, lightweight vehicle that will compete with other universities in the competition.

II. MATERIALS & METHODS

The hydraulic circuit consists of four major components. These components include a reservoir, accumulator, motor, and pump. The reservoir is a storage tank for the hydraulic fluid to be stored and continually reused in the overall circuit. The fluid is drawn from the reservoir by the pump and is deposited back into the reservoir through the motor. The hydraulic motor is the actuator in the system that converts the energy from the hydraulic fluid to mechanical energy that drives the system. The motor takes the flow and pressure of the hydraulic fluid to convert the energy into torque and angular rotation to drive the vehicle. The hydraulic pump generates flow for the hydraulic fluid in the system. The accumulator is the energy storage system that provides supporting fluid flow to the circuit that provides supporting fluid flow to the circuit. The components are connected by a series of fittings, valves, and line bodies.

The pneumatic circuit is composed of two pneumatic cylinders connected in series. The actuation of one causes the other to extend in the opposite direction. Through this reaction the vehicle's parking brake is engaged. This circuit also features a flow control valve to improve rider safety.

The electrical components are powered through a 12V circuit design. A 12V battery is in series with a power terminal block which leads to a power disconnect switch, which is in series with the rest of the electrical circuit. A momentary push button switch is in series with a 3-way 2-position valve. A three way ON/OFF/ON switch in series with the 4-way 3-position valve. The Arduino is connected to the terminal block for power. The method of connection of these components included soldering, fastening down wires with set screws and using battery terminal connectors.

III. OPERATIONS

The hydraulic circuit converts human power into mechanical energy within the system with a linkage between the pedals and the pump. While the human operator is

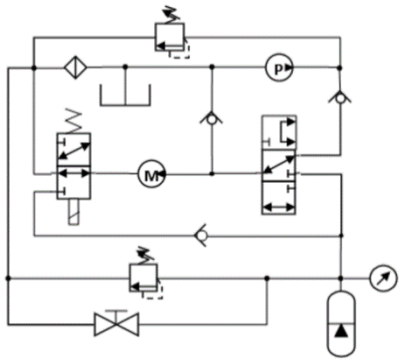

Figure 1: Hydraulic Circuit

pedaling, the pump is generating fluid flow from the reservoir which activates the circuit. While the rider is pedaling and the pump is generating fluid flow, the fluid flow is directed to the motor. This motor-pump linkage drives the vehicle. Figure 1 shows the connections between the main components in hydraulic circuit diagram. As the operator ceases pedaling, the pump stops drawing liquid from the reservoir; however, fluid flow is still generated through the motor. This fluid can be sent to the accumulator where it is stored as potential energy. The stored energy can be discharged back into the circuit when desired and drive the vehicle through the accumulator discharge.

The pneumatic circuit is tasked with engaging the vehicle's parking brake. It is engaged when the human operator pulls a lever that actuates a double acting pneumatic cylinder. Pressure is built up in this cylinder and forces the second cylinder, a reverse single acting cylinder, to change state. The end of the second cylinder is connected to a standard bicycle rim brake. To prevent potential harm from befalling the rider, a flow control valve is positioned in series with the cylinders. This allows for the lever to slowly return to its original position.

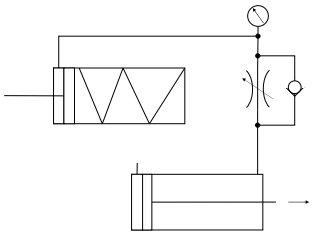

Figure 2: Pneumatic Circuit

The electrical components allow for key valves to actuate and to power a digital controller that will notify the operator of pressure charge within the circuit. The 12V battery sends charge to the power disconnect switch. The power disconnect switch allows for safely connecting components and connecting wires while in the off position. The power disconnect switch also allows for safely powering on the circuit rather than getting a power surge if the circuit was directly connected to the battery at once. The power disconnects switch supplies power to the terminal block. The terminal block acts as hub to distribute power to the electrical components. A momentary push button switch allows for actuation of the 3-way 2-position valve when engaged. While not engaged the button does not send power to the valve. The 3-way ON/OFF/ON 3-way toggle switch will allow for actuation of the 4-way 3-position valve. The middle position of the switch sends no charge, while to top position charges a coil to pull the valve, and bottom position pushes the valve. The Arduino controller allows for digital readouts from a pressure transducer in the circuit and will allow for the operator to monitor charge in the system. All components are grounded to common metal piece on the frame.

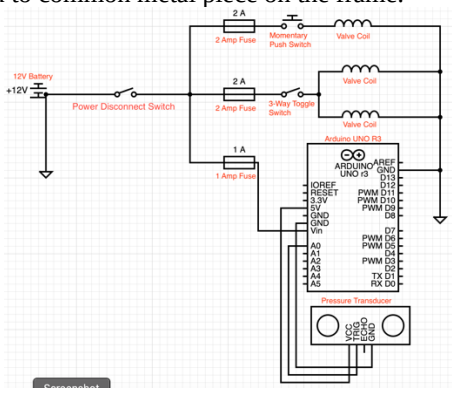

Figure 3: Electrical Circuit

IV. Conclusion

As the first team from NIU to participate in the FPVC, the team believes they have created a solid vehicle for the competition. The vehicle functions as expected, and although the vehicle may not take first place in the competition, the team has created a solid vehicle that will be the stepping stones to better vehicles in the future of this competition for this university.

Acknowledgment

We would like to thank Northern Illinois University for their full support over the challenging and unprecedented semester. We would like to thank our industry mentor Bruno Risatti for the guidance on this project. Also, thanks to Dr. Peterson, Dr. Malkawi, Sandhya Chapagain, and Stephanie Scaccionoce of the NFPA for working closely with us in the course.

References

[1] National Fluid Power Society, "Fluid Power Reference Handbook," Innovated Designs and Publishing, Inc, First Edition, April 2019. *(references)*