CandyWorx Revolv Belt Coater Belt Cleaner

Chris Schmidt
Mechanical Engineering
Northern Illinois University
Dekalb, IL
Z1567642@students.niu.edu

Robert Ciavarella
Mechanical Engineering
Northern Illinois University
Dekalb, IL
Z1852936@students.niu.edu

Tim Cullinan
Mechanical Engineering
Northern Illinois University
Dekalb, IL
Z1858993@students.niu.edu

***Abstract*—For this project, the group assigned was partnered with CandyWorx to find a solution for the accumulation of product buildup on the Belt of the CandyWorx Revolve Belt Coater. This project is to display the mechanical knowledge of the team through various forms of problem solving. The team used CAD, mechanical calculations, finite element analysis, and assembly to test the skills provided through Northern Illinois University. Through this project the team used various methods and calculations to produce a one-of-a-kind prototype for CandyWorx to improve upon to incorporate into their line of products. CandyWorx is an engineering company that provides solutions for the confectionery industry in the form of equipment, engineering services, and custom designs. The impact on the industry has reached all over the world and they are on the front line of innovation. The Revolv Belt cleaner is an add-on to one of their existing products, that highlights the attention to detail the company maintains throughout all their products. The team was tasked with developing a product that could be self-contained within the Revolv Belt Coater, that in eventuality would use steam as the main vessel of sanitation, along with a form of mechanical agitation to remove any larger accumulations of product layered on the surface of the belt.**

Keywords-Prototype, Belt Cleaner, Mechanical agitation, Steam, CAD, Calculations, Finite Element Analysis, Assembly.

I. Introduction

Modular plastic belts are a typical component for conveyors throughout the food processing supply chain. One drawback to modular plastic conveyor belts is that they can be challenging to clean in between their various joints and hinges. With an ever-increasing focus on food safety in the industry, the ability to thoroughly clean modular plastic conveyor belts with repeatable accuracy is of great interest to Candy Worx as a food equipment manufacturer. Thus, Candy Worx would like to design a Revolv Belt Cleaner.

II. Problem Description and Statement

The Revolv Belt Cleaner prototype shall be a device that contains a mechanical cleaning device to agitate loose debris from the surface of the belt. The device shall also simulate the application of low-pressure steam and a sanitizing solution to the surface of the belt to help release affix debris, penetrate between the hinges and gaps in the modular plastic pieces, and prevent the future growth of bacteria. Finally, the Revolv Belt Cleaner must also traverse the width of the belt to clean the entire belt surface while the belt slowly travels past the Revolv Belt Cleaner's pathway. By the end of this project, it is expected that the Revolve Belt Cleaner prototype will be complete for demonstration and testing.

The objectives for the project include:

- Design Of Prototype
- Heat Transfer Analysis

III. Design

A. Design

The team produced a novel design through various forms of research, calculations, out of the box thinking, and CAD. This was achieved by combining all the knowledge provided throughout their education, guidance of the faculty advisor and Industry client. Through multiple iterations and evaluation an optimal design was decided upon and fabricated. Using Computer-Aided-Design the production of the optimal design was done in a cost-effective manner. Computer-Aided-Design eliminated the necessity of various physical changes to be made and allowedFigure 1 is a visual depiction of the end design produced in Solidworks, that was then fabricated to the exact specifications of the model.

for a product that fit the customer's needs.

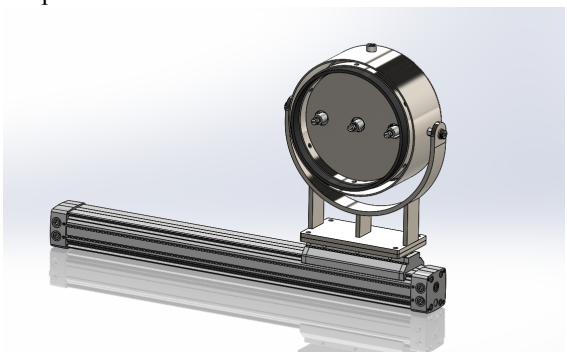

(Figure 1 - The Master Assembly)

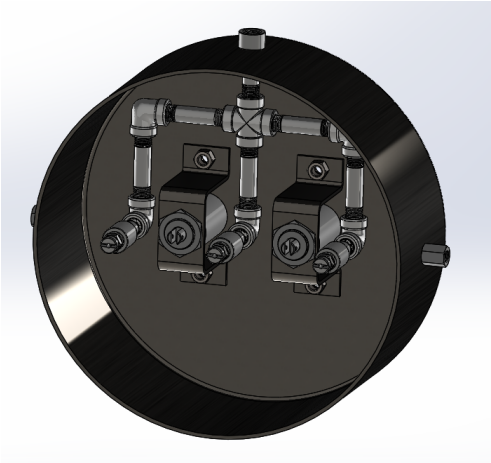

(Figure 2 - Internals of Belt Cleaner)

B. *Method of travel*

A major constraint within the project was the decision on how to modulate the belt cleaner to across the span of the Belt Coater belt. The decision to use a rod less air slide was a major success, due to its compact design, simplistic operation, and compatibility within the existing system. This allowed for the optimal design to fit within physical constraints of the Revolv Belt Coater's enclosure. The rod less air slide required for the prototype capitalizes on the use of compressed air, which is in common supply with CandyWorx field of work.

C. *Sanitation*

The reduction of cross contamination within the Revolv Belt Coater was a major factor within the design of the belt cleaner. CandyWorx required a design that could simulate the reduction of bacteria traveling from one product batch to another. By utilizing steam and cleaning solution as a basis for calculations and consideration, the prototype employs a three-nozzle system, each equipped with a fan style head, that allows for adequate coverage of the belts surface as it travels across its length, as well as triples the amount of effectiveness due to the nozzles. To ensure the nozzles compatibility for the prototype the team calculated the pressure required to remove product from the belts surface.

D. *Mechanical Agitation*

Due to the amount of large accumulations of product that occur on the belt during operation it was required that a form of mechanical agitation or scraper be attached to the belt cleaner. To achieve this, Viton rubber was utilized due to its food safe composition and attached to two linear actuators that allow for the scraper to be extended during operation or retracted during production. The scraper also doubles as a method of reducing fugitive steam and encapsulating it within the ring focusing the steam in the directed area.

E. *Stabilization of Head Assembly*

To take into consideration the slope at which the belt coater belt is angled the team implemented a rotational axis through the method of mounting the assembly to a bracket with bronze bushings for free form motion. As the linear actuators are extended and the scraper comes into contact with the belt the entirety of the head assembly will begin to self level against the surface of the belt allowing for the head to accurately attack the product on the belt. Once the cleaning process is complete two torsion springs were employed to allow for self correction of the head assembly, bringing it back to plumb.

IV. Results

During the process of designing the mounting bracket concern was raised based upon the amount of force being applied to the mounting bracket for the head assembly due to the force applied by the belt during its rotation, as well as the sheer mass of the body. Through Ansys analysis, a justification was made to upscale the mounting bracket from a ¼ in. x 1 in. mounting bracket to a ⅜ in. x 2 in. mounting bracket to reduce stress and deformation placed upon the bracket and overall increase longevity.

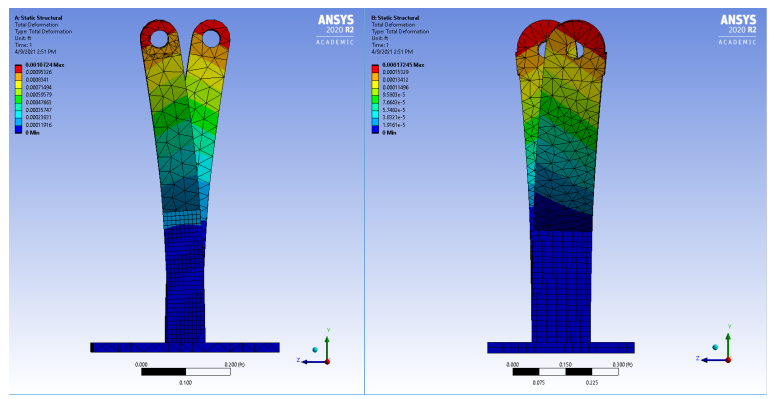

(Figure 3 - ¼ in. x 1 in. vs ⅜ in. x 2 in. Mounting Bracket)

V. Conclusion

Overall, the team was able to produce a fully functional prototype device, that highlights all of the key points required to fabricate a large scale model required for the CandyWorx Revolv Belt Coater.

Acknowledgements

The team would like to thank Bobby Sinko (PHD), Kevin Laud (VP of CandyWorx), Dan Statkus (Project Manager of CandyWorx), Chris Moore (Engineering Manager of Spec Engineering), Brian Bernard (President of Spec Engineering), and Meredith Perry (VP of Spec Engineering) for the opportunity to develop this product, as well as the neverending support and guidance throughout the project.