Development of A Low-Cost Handheld Spectrometer/Flicker Meter

Caleb Dougherty, Ryan Sedlock, James Siwik, Jacob Sprowl

Advisors: Dr. Kevin Martin, Dr. William Mills

Department of Engineering Technology

NORTHERN ILLINOIS UNIVERSITY
College of Engineering and Engineering Technology

Abstract

Flicker is a common issue with light sources and may not be visually perceivable. The purpose of this project was to develop a low-cost handheld measurement device that can measure flicker and spectral power distribution (SPD) of a light source so that flicker can be identified and characterized.

Background

Temporal light modulation (flicker) is any change in the intensity or spectral distribution of a light source.

- Visual & Non-Visual
- Characterized by the amplitude and frequency of the variation

The three main components of sight affected by flicker:

- Visual
- Cognitive
- Motor

Stroboscopic effect shown in Figure 1

- Occurs when a static observer views a moving light source between 80-2000Hz
- Shown in Figure 1

Figure 1

Phantom array effect (Ghosting)

- Occurs when a moving observer views a static light source, generally only occurs in high contrast areas
- Shown in Figure 2

Figure 2

Negative Impacts

Effects on performance and health:

- Fatigue
- Seizures
- Headaches
- Eye strain

Reduced worker comfort and productivity

Metrics and Equations

1. Percent Flicker $$PF = \frac{A - B}{A + B} * 100$$

2. Flicker Index $$FI = \frac{Area1}{Area1 + Area2}$$

Percent Flicker

- Calculated through use of min and max points shown in Figure 3
- Measures the depth of modulation of flicker
- A = Max, B = Min.

Flicker Index

- Makes use of the integral of the curve shown in Figure 3
- Characterizes the intensity variation based on shape of waveform as well as amplitude

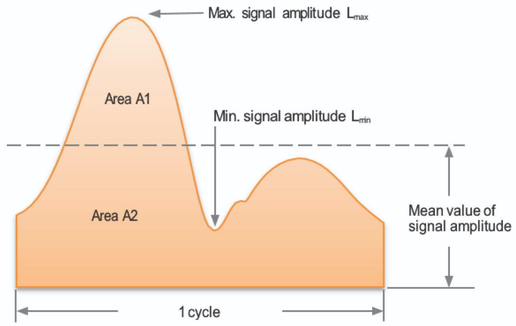

Figure 3

Other Metrics

- Flicker Visibility Measure (FVM)
- Stroboscopic Visibility Measure (SVM)
- Phantom Array Visibility Measure (PVM)
- Time Domain Flicker Visibility Measure (TFVM)
- Flicker Perception Metric (Mp)
- Short Term Flicker Severity (PstLM)
- Long Term Flicker Severity (PltLM)

Why Percent Flicker and Flicker Index

- Uses Luminance to calculate flicker
- Can be used for nonvisible flicker above 2,000 Hz
- Uses light intensity waveform across a time domain instead of frequency domain
- Can make a flicker measurement in one reading

Results

Figure 4 shows the results using both a PC and a Raspberry Pi 4. These have similar performance between measurements for both compact fluorescent and LED bulbs.

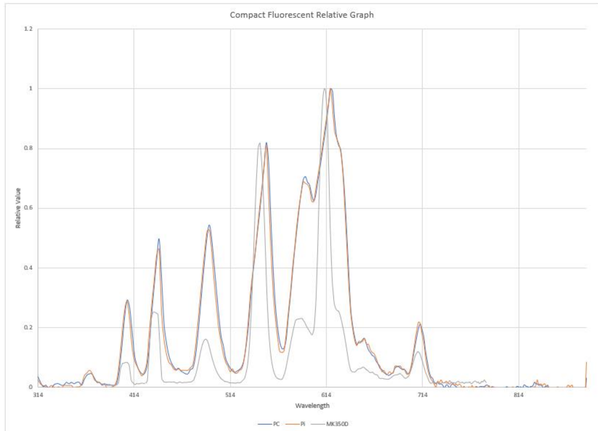

Figure 4

Shown in Figure 5 the C12880MA circuit compares closely with measurements from the MK350D Spectrometer. As a result of differing sensitivities between wavelengths of the sensor, a correction factor is utilized for the C12880MA . This confirms that an accurate reading can be achieved.

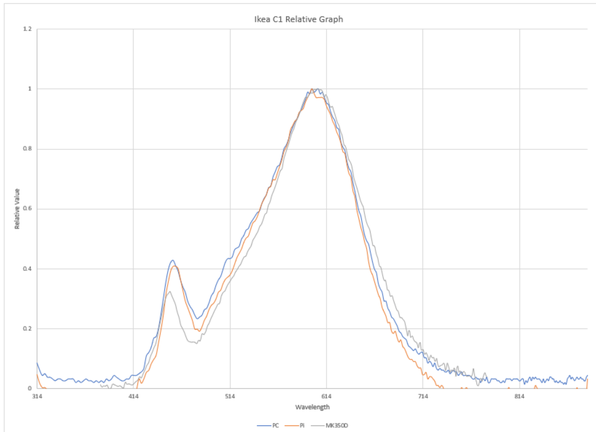

Figure 5 - C12880MA reading from RPi4 and PC compared to Mk350D

Design Objectives

- To create a combination spectrometer and flicker meter utilizing a Raspberry Pi
- Able to detect flicker of at least 2000 Hz
- Create a marketable handheld prototype

Design Components

- Hamamatsu C12880MA
- Diligent Analog Discovery 2
- 1.4 GHz 64-bit quad core Raspberry Pi 3B+
- PiTFT Plus 320x240 3.2" TFT + Resistive Touchscreen
- Adafruit 3.7V/1.2A li-polymer battery
- Adafruit powerboost 1000 charger
- Aluminum enclosure

Isometric Drawing Packaged Components

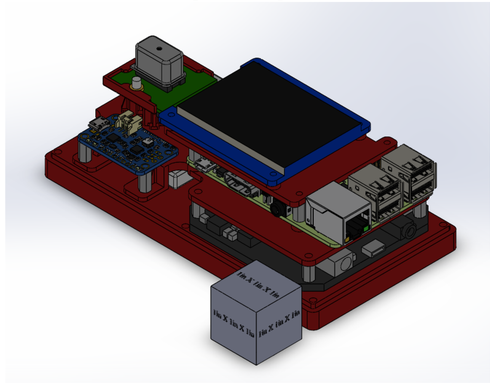

Figure 6

Conclusions

The integration of a RPi, Analog Discovery and Hamamatsu C12880MA spectrometer sensor shown in Figure 6 created the possibility for a lower cost combination spectrometer and flicker meter capable of meeting or exceeding industrial meters (2kHz-5kHz). As we were able to acquire spectrum power distributions, we believe the capability of measuring flicker using this device can be achieved.

Acknowledgments

Dr. Mills
Dr. Martin
Mr. Dana Hinkley (Hamamatsu)
Ken Tsui
Matthew Bikun
Mr. Ed Miguel