SecuriBot

Low cost Autonomous Sentinel Robot

Aaron Freedkin, Joshua Leung, Shawn Bennett, Yingnan Xu
Faculty Mentor: Dr. Donald Peterson
Department of Electrical and Mechanical Engineering

NORTHERN ILLINOIS UNIVERSITY
College of Engineering and Engineering Technology

Introduction

Security robots have recently been rising in technological advancements. They focus heavily on ensuring the security of the people around them, but unfortunately, these robots are uncommon due to their high costs. Typical robots focus heavily on keeping people safe in terms of security, but they do not focus on the potential safety concerns different environments may present.

Materials and Methods

Development of the SecuriBot was started in order to provide home and industry owners with a low-cost autonomous sentinel robot. Equipped with cameras and sensors, the robot can scan its environment using sight, sound, and temperature detection. Combining this with an autonomous moving platform allows the robot to be a suitable replacement to current safety and security technologies.

Mobility System

The mobility system is constructed of four high-torque motors incorporating four mecanum wheels selected for optimal structural mobility. Two dual-motor drivers are used with an Arduino UNO and USB Host Shield for wireless remote control of the Securibot.

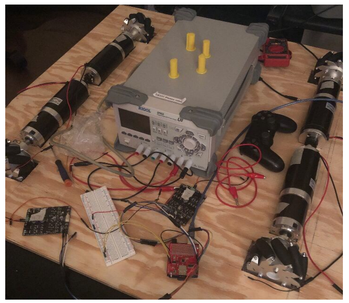

Sensor System

The SecuriBot is equipped with two cameras and two sensors, giving the robot a sense of hearing, depth, and temperature. The Sensor System includes a:

- Depth Camera
- Thermal Camera
- Sound Detector
- Temperature and Humidity Sensor

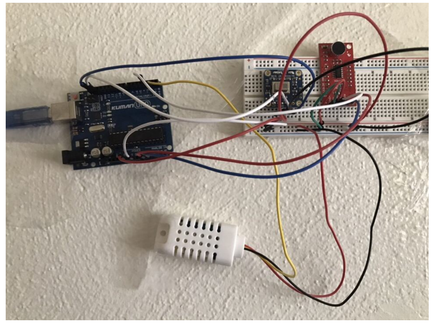

Power System

Securibot receives power from a 24V battery. The motor controllers are connected directly to the battery whereas the LattePanda is connected to the battery using a step-down transformer. The sensors then individually receive power from the LattePanda.

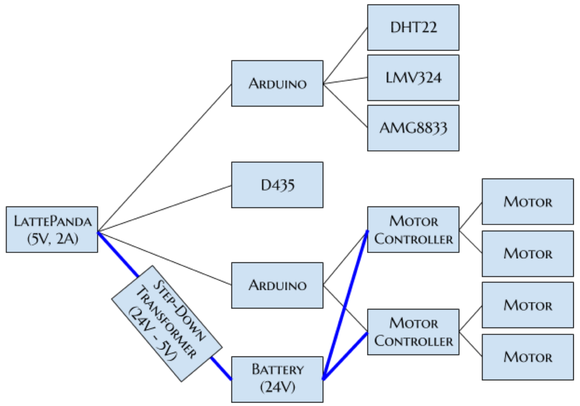

Structure

The Securibot's structure is composed mostly of aluminum 80/20 parts including four T-Slotted outer columns and a T-Slotted center column. The robot is sectioned off using two polyethylene pegboard platforms all resting on a 0.9-meter square plywood actuation base.

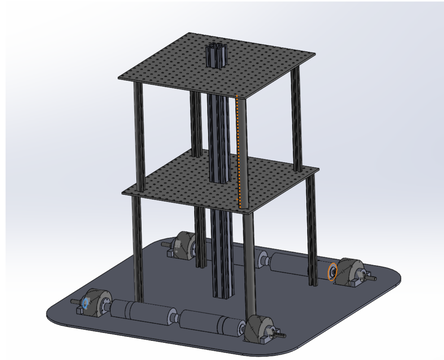

Discussion

In the future, the sensors, D435 Camera, and Mobility system will be combined using the LattePanda acting as a central microcontroller. As for additional functionality, the SecuriBot's large structure allows room for additional sensors. The design of the SecuriBot was carefully thought out to be a platform for future development.

Acknowledgements

The SecuriBot was designed with the guidance of Dr. Donald Peterson, Justyna Kielar, Edward Miguel, and Rory Miller.