# Automated Traffic Signal Snow Removal System

Joseph Bajek[1], Manuel Arevalo[2], Andre Flores[2]
Dr. Eric Lee[2]
[1]Electrical Engineering, [2]Mechanical Engineering

NORTHERN ILLINOIS UNIVERSITY
College of Engineering and Engineering Technology

## Abstract

The proposed project by Eric Lee required the creation of a system that would remove snow from traffic light lens. The system should detect an obstruction of lens and remove it efficiently. A Photocell will detect the obstruction and then send that data to an Arduino to activate the heating element to remove the obstruction.

## Introduction

Traffic lights now use LED modules instead of incandescent bulbs. This is an issue because LEDs produce a small amount of heat which allows snow to build up on lens and block the light. As such our objectives are as follows:

- Fit system in pre-existing traffic lights
- Least amount of changes to traffic light
- Detect obstruction
- Remove obstruction as quickly as possible
- Run only when needed.

*Figure 1: Traffic Light Issue*

## Methods and Materials

**Circuit Design**

The system will be controlled by an Arduino. It consists of a Photocell, Temp. Sensor and the ITO Film as a resistor.

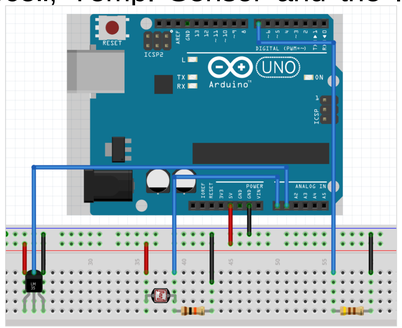

*Figure 2: Arduino Breadboard*

**Model Design**

The design was chosen by the constraints that were applied. Aluminum would be used for final product as it is thermal and UV resistant. For proof of concept it was 3D printed using PLA.

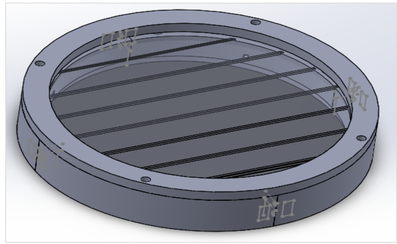

*Figure 3: Heating Module*

## Results/Discussion

Our device can achieve great temperatures. We decided to have the heating element to be arranged throughout the surface of the lens in order to provide sufficient heat to melt snow build-up rapidly.

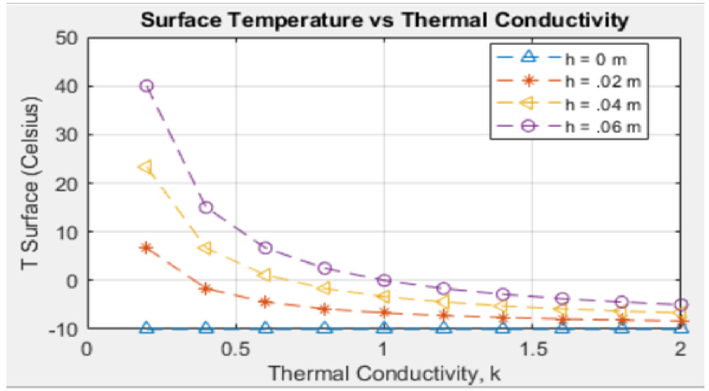


*Figure 4: Surface Temperature vs Thermal Conductivity*

This device does have some downfalls. When the porosity of snow becomes very large, then the device encounters some problems achieving the desired temperature to melt the ice. This could be further tested/improved. Unfortunately, we could not test the device.

## Conclusions

In conclusion, this system is a great idea for LED traffic signals. The heating element used will help improve visibility of light and will use a low amount of energy since it only activates when necessary.

Also, it has the capability of being installed/uninstalled easily. This further improves its efficiency. However, it does need more work to be done.

## Acknowledgements

*We would like to thank Dr. Lee, Dr. Cho, Dr. Miguel, Sandhya Chapagain, and NIU for providing assistance as well as the resource for research and experimentation.*