Synthesis of Ammonia for Thermochemical Energy Production

Ian Hogshead, Nate Aden, Kyle Callahan
Advisor: Dr. Tariq Shamim
Department of Mechanical Engineering

NORTHERN ILLINOIS UNIVERSITY
College of Engineering and Engineering Technology

Abstract

The global adoption of clean energy has long been hampered by inadequate battery technology. High density, long term power storage solutions are necessary for society to end the use of greenhouse gas emitting fossil fuels. This project aims to create a simulation of a closed loop ammonia thermochemical energy storage system which can be used to give insight into how a system will need to be designed to achieve a desired power output.

Introduction

Ammonia thermochemical energy storage leverages the use of solar heat energy to break ammonia into its components, Nitrogen and Hydrogen. These elements are stored in separate tanks and can be easily transported anywhere in the world using existing infrastructure. When energy generation is needed, they will be recombined in a reactor in an exothermic process that heats water to produce superheated steam. This high-pressure steam is sent to a specialized turbine that turns a generator in order to generate electricity and the newly created ammonia is recycled back into the system in a closed loop to repeat the process.

Methods and Materials

Aspen Plus software was used to model the energy storage system. It has a library of components: reactors, pumps, and heat exchangers that can be programmed to exact specifications.

Results

The simulated system took in 3.42 Mw of solar energy and was able to produce 338 Kw of usable electricity. This works out to a 10% conversion rate from sunrays to electricity.

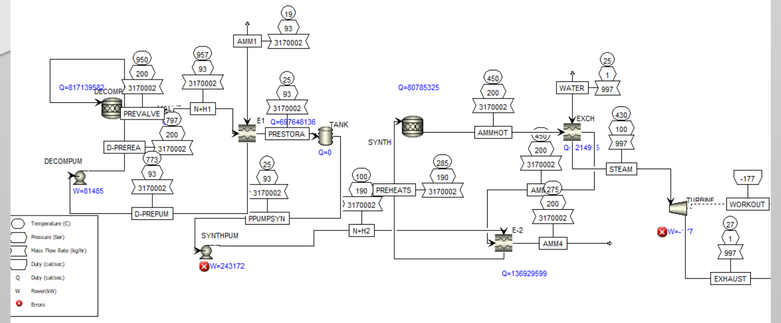

Discussion

Heliostats concentrate sunlight onto an ammonia dissociation reactor. Resulting Nitrogen & Hydrogen are then sent to a synthesis reactor, recreating ammonia and enough heat to power a steam engine thereby producing clean & portable energy.

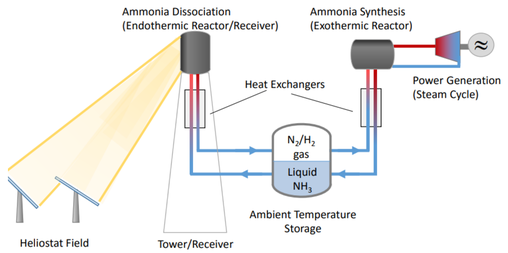

Conclusions

This simulation demonstrates the potential Ammonia has as a thermochemical battery. Ammonia is a low-cost chemical solution to the world's energy needs, With infrastructure existing in all major countries. Ammonia is the answer to global distribution of clean energy on demand.

Acknowledgements

Dr Tariq Shamim – Chair of Mechanical Engineering
Northern Illinois University - Department of Mechanical Engineering
Curtis Steele - Technical Services Coordinator