Recyclops

Anthony Kohl[1], Jacob Vosecek[1], Adam Madey[1]
Advisor: Iman Salehinia, Ph.D.[1a]

[1]Mechanical Engineering

NORTHERN ILLINOIS UNIVERSITY
College of Engineering and Engineering Technology

Abstract

The goal of the Recyclops is to convert recyclable plastics and rejected 3D prints into new spools of 3D filament. With a user-friendly and compact design, the appeal of this device focuses on hobbyists in the industry. To accomplish this, the material undergoes multiple stages of shredding, melting, extruding, and self-coiling. A user interface is implemented to display and control rotation speeds and heating temperatures for optimal quality of the final product.

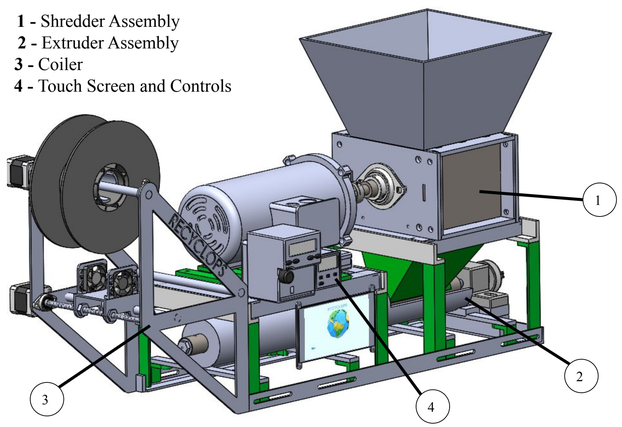

Figure 1 - Shredder Assembly

Introduction

Objectives:

- Shred plastic material
- Melt plastic material through precision controlled heating
  - Temperature measurements and adjustments made through PID controller and thermocouple
- Extrude and self coil final product
  - Eliminate filament entanglement
  - Cool/harden filament

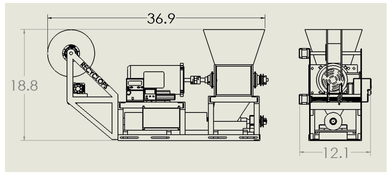

Figure 2 - Recyclops Overall Dimensions

Methods and Materials

Shredder –The shredder consists of multiple blades and knives that are placed onto a hex shaft which is attached to the motor. When rotating, the plastic will be shredded and fall through the hopper followed by the extruder. This operation will be accomplished via ½ horsepower AC motor powering both the shredder and the extruder at operating at 120V. To optimize shredding the torque being produced by the motor will be 450 Inch-Pounds (50 Nm).

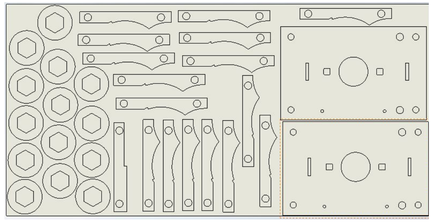

Figure 3 - Shredder waterjet DXF files

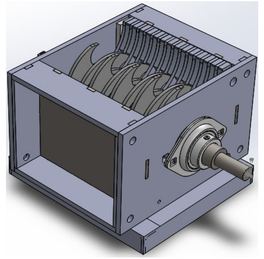

Figure 4 - Shredder Assembly

Extruder - The extruder is a combination of heating clamps, a tapered auger, and the nozzle. When working in unison the barrel temperature is controlled with a PID, melting the plastic and thus can be extruded with the tapered screw through the nozzle where the filament can be wound with the coiler.

To optimize operation of both the shredder and the extruder the motor will be operating at 70 RPM regardless of the type of plastic.

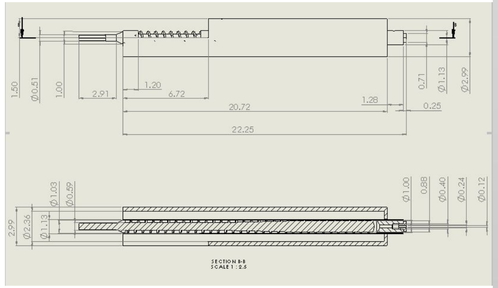

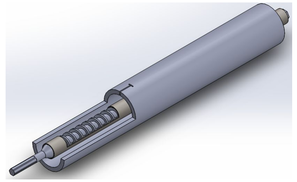

Figure 5 - Auger Assembly and overall Dimensions

Discussion/Results

The team researched the properties of several types of plastics. By understanding the melting temperature of the plastic the team was able to determine what temperature to set the PID and what proportional, integral, and derivative constants were needed in order to maintain the proper temperature for the melting plastic. This information can be conveyed to the user through the GUI. Also air entrapment in the final product caused by auger back pressure and air pockets can be greatly reduced with a tapered auger to produce better performing filament.

Conclusions

Previous companies have offered machines that extrude specialized plastic into filament, however this machine is the first of its kind in which shredding, extruding, and coiling take place in one machine. This makes the machine more versatile allowing users to reuse household plastics and ultimately reducing plastic waste.

Acknowledgements

We would like to express our thanks to our faculty sponsor Iman Salehinia and German Ibarra for motivating the team and leading the team in the right direction. Both served as great mentors for the project and offered insight as to what is expected in industry.