Short Range Wave Glider

Hannah Higgins, Jason Ostenburg, and Mary Reinertson
Advisor: Dr. Ryu

Department of Mechanical and Electrical Engineering, College of Engineering, Northern Illinois University

Northern Illinois University

Abstract

Being able to study our bodies of water is extremely important to understanding our earth and how **climate change** is affecting it. **Robotic, underwater collection devices** are being designed and utilized to help with this endeavor. The Short Range Wave Glider combines the **benefits of several different underwater robots** and is designed specifically for **Great Lakes research.**

Introduction

The Great Lakes are under many different threats, such as pollution, invasive species, and climate change. By having a semi-autonomous system gathering data from around the lake, these threats could be monitored and recorded.

Unmanned Surface Vehicles themselves are not widely used in the Great Lakes, which makes this project vital to help supplement currently ongoing research.

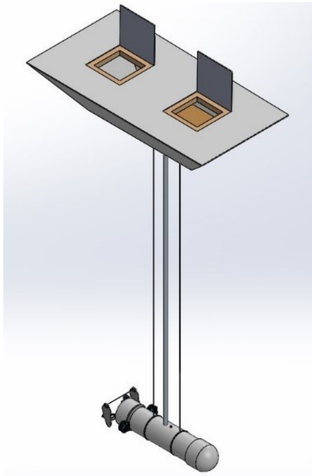

Fig 1. Model of proposed Short Range Wave Glider.

Methods and Materials

The Short Range Wave Glider consists of three components: **the float, the tether, and the submersible.** The float and sub both contain the **vital sensors and electronics used to collect data,** while the tether allows wires to safely run between the two.

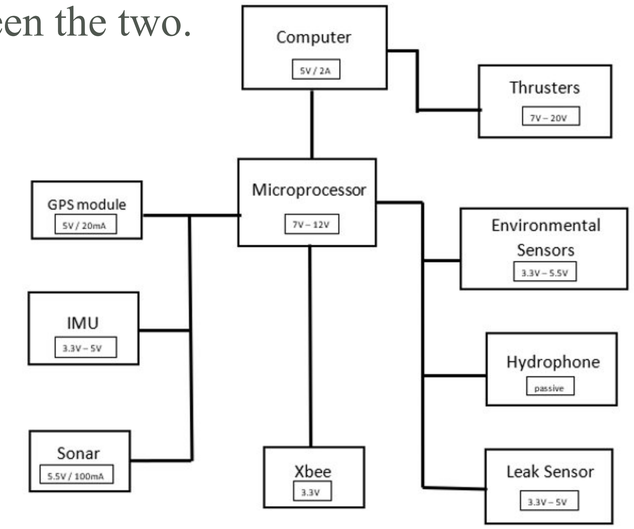

An array of batteries are used to power the wave glider's environmental sensors as well as the communication and navigation system. The sensors detect water conditions and aquatic bioacoustics.

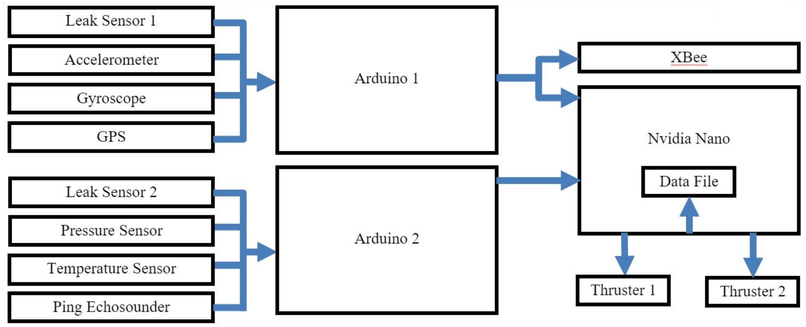

Extensive coding was also performed to ensure that **sensor data** was being **correctly and accurately collected and stored**.

Results and Discussion

A prototype of the Short Range Wave Glider was partially constructed to ensure the design was valid. The environmental sensors could pick up accurate readings and store, send, and process them.

CAD drawings, wiring diagrams, and testing of basic code show that the **Short Range Wave Glider would be a successful underwater data collection device.**

Fig 2. Partial construction of Short Range Wave Glider.

Conclusions

While the manufacturing phase was limited, a **proof of concept** was tested for each system of the robot. With the success of these tests, it can be concluded that **the Short Range Wave Glider would be proficient in its data collection.**

Acknowledgements

We would like to thank Dr. Ryu, for his guidance. We would also like to thank NIU CEET for the use of its resources. Finally, we thank Blue Robotics, Sparkfun Electronics, Fischer Connectors, and Aquarian Hydrophones for their generous donations.