Device to Simulate Biomechanical Exposures Due to Power Tool Torqueing

James Becker, Siamak Berenji, Clayton Coogan
Advisor: Dr. Ting Xia
Client: Simon Kudernatsch
Department of Mechanical Engineering

NORTHERN ILLINOIS UNIVERSITY
College of Engineering and Engineering Technology

Abstract

Factory workers around the world utilize high-torque power tools for a variety of tasks during assembly process. The use of these tools puts users at risk of injury and over time can be associated with Cumulative Trauma Disorder (CTD), particularly in the upper extremities. The goal of this project is to design and construct a device capable of precisely simulating repeated torque exposures in a laboratory setting

Introduction

Ergonomic approaches and assistive devices exist to alleviate the high levels of exposure due to the power tool use. In order to be able to study the effects of power tools on users and to evaluate the effectiveness of the currently existing assistive devices in a controlled laboratory environment, a new research tool is needed. The goal of this project is to design and construct a device capable of precisely simulating biomechanical exposures experienced by workers during the use of high-power torqueing. This device, upon command, will be able to replicate the effects of torque ranging from 1 Nm of torque up to the maximum level of 4000 Nm, depending on how fast the motor spins the flywheel. The amount of time that it takes in order to spin up to a certain speed and brake creating torque, can be accomplished under a few minutes time per run. The material weight for the project is less than 65 kilograms and can be moved between different test locations.

Methods and Materials

This prototype consists of a combination of custom-made and pre-made components. The design includes a DC motor and pulley that rotate a weighted flywheel. The torque is created when two brake discs are forced together causing power to transfer to the handle. The entire system is controlled and monitored through LabVIEW software integrated with various sensor and actuators.

List of Major Components	
1)	Handle
2)	Flywheel
3)	DC Motor
4)	Disk Brake
5)	Safety Brake

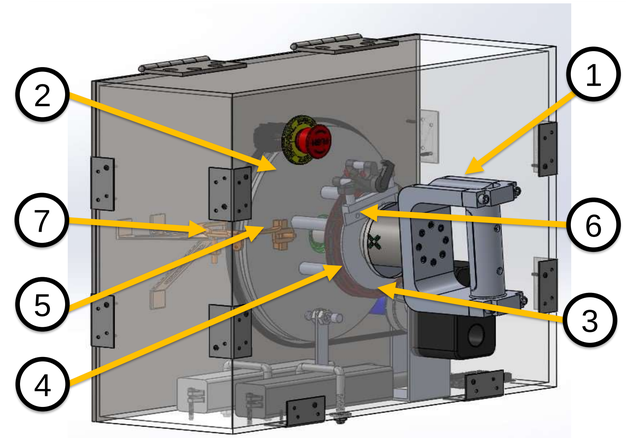

Results

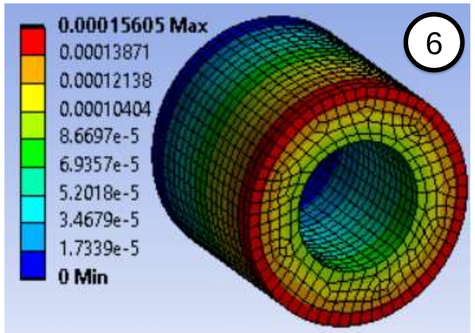

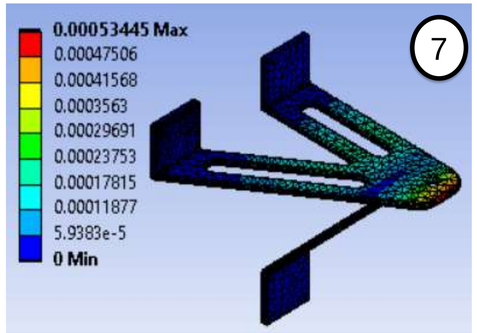

To test the strength of our custom designed parts, finite element analysis was performed on the caliper and bearing adapter(6) that transfers the power from the brake disk to the handle and on the bracket(7) that holds the brake Shown is the total deformation in mm for a simulated load of 4000Nm . This deformation was found to be well within the safe margin of deformation.

To control the RPM of the flywheel based on the torque required by the operator, a simple linear relationship was formed assuming an ideal instantaneous stopping time (t = .001s)

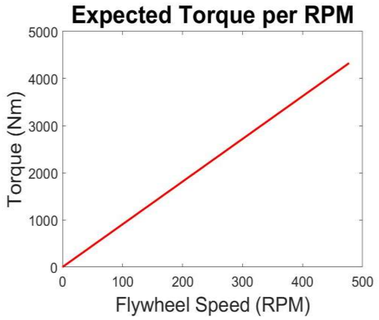

Discussion

This project has given the researcher the ability to test the torque responses on the human arm according to their own specifications. Many hours of research and development went into creating a device that met the required specifications. Allowing the device to be used by a computer software such as LabVIEW, will result in an easy to use and easily replicable testing interface. Many of the parts in this build were chosen to be easily accessible and replaceable in case of failure or maintenance. Possible improvements to the design include a reduction in overall size through a better optimization of space. A weight reduction may also be necessary as the final project weighs 38.5kg. This will improve mobility of the overall system if it is needed to change positions on the mounting structure in the research lab.

Conclusions

CTD poses a threat to many workers and they may not even know it. The repeated torqueing motions they endure daily could cause serious harm in the long term. This project could have a very large effect on the health and safety of factory workers across the world, including a reduction of injuries. The design can simulate the motions of power tools used in factories to study the effects of the motion on human test subjects.

Acknowledgements

- Simon Kudernatsch
- Dr. Ting Xia
- Sonali Rawat
- Michael Reynolds
- NIU CEET