Device for High Strain Rate Deformation Research and Experiments

Jiale Ji

Northern Illinois University

Department of Mechanical Engineering

Abstract: The task of this project is designing a suitable fixture for the Split-Hopkinson bar device in NIU's lab. The fixture is used to mount the air bearing that is used to support the incident bar and transmit bar. The function of the fixture is not only to mount the air bearing, but also to control the Y-direction and Z-direction displacement of the air bearing. At present, the test device with high strain rate deformation, which is more commonly used internationally, is the Hopkinson pressure bar device. The reason why the Hopkinson pressure bar device is more common is that the Hopkinson pressure bar device has many obvious advantages, such as: simple principle, low cost, high accuracy, can measure a variety of mechanical properties, and can simulate high strain rate scenarios Wait. The Materials Laboratory at Northern Illinois University has a Hopkinson prototype that can only perform high-strain compression experiments that produce rough signals.

i. Introduction

This project is an improved design; the Split-Hopkinson bar apparatus exists many years in EB143 Lab in NIU. It has been redesigned and improved by many classmates. Now, the high strain rate compression experiment was successful, we committed to finishing the high strain rate tensile experiment. For getting the faster impact speed, the project used half inch bar rather than 1 inch and air bearing which can produce less friction than linear bearing. The air bearing is aerostatic, so the high-pressure air is provided by air pump. Figure 1 shows the model of air bearing.

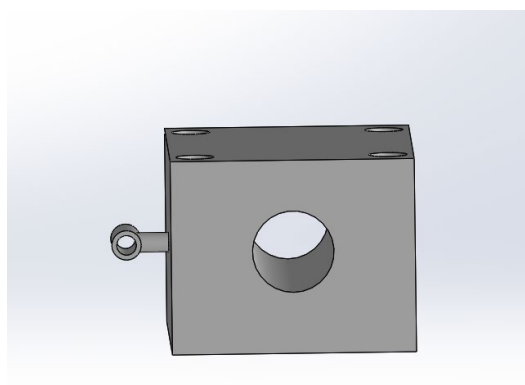

Figure 1: Model of air bearing

ii. Methods and Materials

The method to control the Z-displacement is using four screws whose unthread parts are mounted in four ball bearing, in this way, when rotating the screws, the screws will go up linearly, just like jack. The method to control the

Y-displacement is using four slots, the air bearing can be moved slightly in Y-direction, but it is enough. The materials of this fixture are cast iron and steel. The two plates are made of cast irons, others are made of steel.

iii. Results

Due to in the situation, the result of the project becomes the simulate model and stress and deformation analysis. Therefore, figure 2 shows the model of the fixture and figure3 displays the deformation of the fixture when the load and boundary condition are set on the fixture.

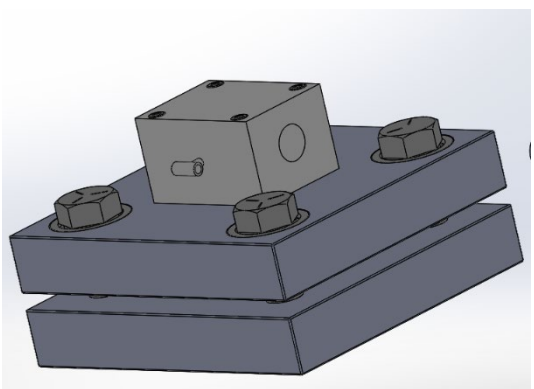

Figure 2: The 3D model of fixture

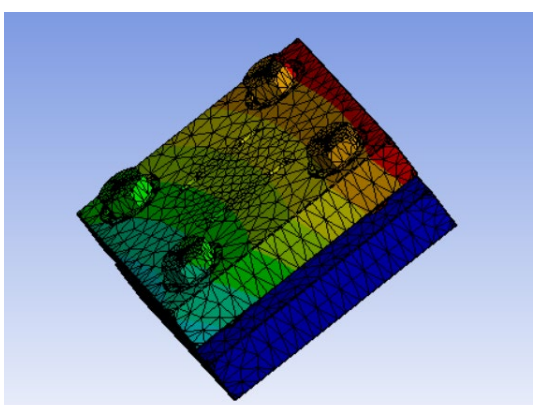

Figure 3: The result of deformation analysis in ANSYS

iv. Discussion

The cost of this fixture is huge. It takes 1000 dollars. The assemble procedure is complicated, it needs sleeve bearing and skills of assembler. The ball bearings are not sealed, so they are need be lubricated on time.

v. Conclusions

In SolidWorks, the extra freedoms of motion are restricted. Then we can simulate the motion of screws, bearings, and bolts. It shows that the fixture can mount the air bearing suitably and accurately. In ANSYS, the contact condition and boundary condition are set, then deformation of fixture is calculated out. The maximum deformation is 2.3e-6 millimeters. The value is so small that shows the fixture is adamant and reliable. That mostly is because that the air bearing is an aerostatic air bearing; the high-pressure air loads a hooked force, the resultant equals zero. The fixture just needs support the gravity of the air bearing. After the materials arriving, we will machine the plates and assemble the fixture for the device.

vi. Acknowledgements

I would like to express my gratitude to Dr. Gau, Matthew Kleszynski and Dian Li. You help me so much in the process. I also thank NIU for providing enhanced research resources and enrichment meetings. Thanks, all of you.