Synthesis of Ammonia for Thermochemical Energy Production

Team 60

Ian Hogshead, Nate Aden, Kyle Callahan
College of Engineering and Engineering Technology
Northern Illinois University, DeKalb, IL, USA

***Abstract* —**

This project aims to examine the feasibility of an Ammonia battery in terms of power generation and storage. Current battery technology has held back the adoption of renewable energy technology's primarily due to low energy density. Ammonia thermochemical energy storage (TCES) used in conjunction with concentrated solar power plants allows for the collection and long-term storage of power generated from the sun. This is accomplished by leveraging the heat from the sun to split the Ammonia molecules into its base components. These elements can be stored and later recombined in an exothermic reaction generating temperatures sufficient for steam powered turbines. A simulation of this technology was constructed to aid in the development of an Ammonia TCES. The simulation described below achieved an efficiency of 10%.

I. Introduction

The primary purpose for an Ammonia thermochemical energy storage system is to increase the practicality of solar energy by allowing for long term storage and global distribution of the resulting power. This will be accomplished while decreasing the cost per kilowatt-hour of electricity below the cost of fossil fuel generated power, thus making it economically viable. While the cost of solar panels has plummeted over the last two decades, battery technology has yet to make any significant improvements, as lithium batteries have extremely low energy density, about 1% that of liquid fuels. Current Lithium technologies achieve an energy density of around 250 Wh/kg while gasoline is 12,700 Wh/kg. [1] Ammonia TCES will help close this gap with an approximate energy density of 5,200 Wh/kg, 20 times that of Lithium ion batteries. [2]

A computer simulation of an Ammonia thermochemical energy plant was simulated in Aspen process simulation software. This software is used to test and modify system designs in a rapid and cost-effective manner. This simulation will aid in the development of a complete Ammonia TCES system. The user will enter desired features for the system and the simulation will run calculations on the rest. Simulation allows for the most efficient system to be designed without the need for building scale models in a lab setting.

II. System Description

The model created in Aspen Plus V11 is to be used a tool for anyone who is trying to design an Ammonia based thermochemical energy storage plant. The system is built as an open-loop system due to Aspen's inability to cooperate without a material stream in. The model can be split into three sections: the decomposition block, the synthesis block, and storage. The decomposition block, shown in Figure 1, consists of a reactor, valve, heat exchanger, and a pump. In order to get a compatible energy density out of Ammonia, the pressure needs to be about 200 bar. The heat exchanger is used to transfer the excess heat from the product of decomposition to the reactant. The decomposition of Ammonia is an equilibrium process that must be overcome by temperature and pressure. The addition of a catalyst increases the rate of this process, but Aspen does not use catalysts. The valve of the block is to relieve the pressure built up during decomposition.

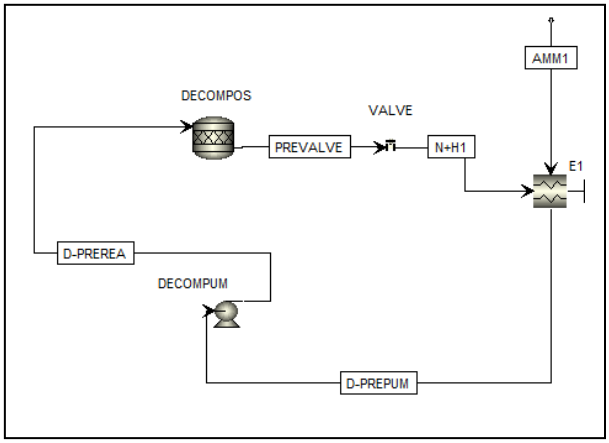

Figure 1: Decomposition Block

The synthesis block, shown in Figure 2 with the storage tank consists of two heat exchangers, a pump, a reactor, and a turbine. The heat exchanger, pump, and reactor have the same job as the decomposition block. The extra heat exchanger allows the energy created from the

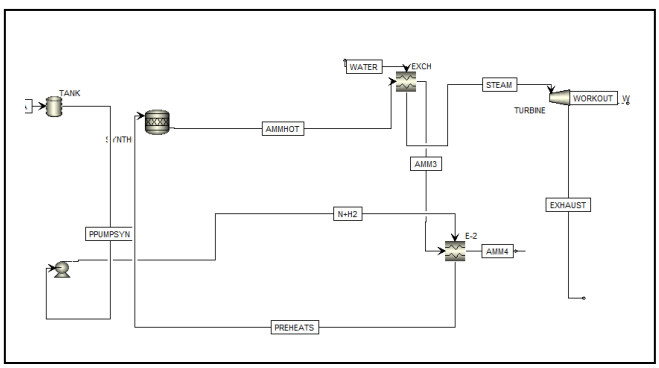

Figure 2: The Synthesis Block and Storage Tank

exothermic reaction of creating Ammonia to be utilized for a turbine. The turbine is then turned by the steam. The storage is a tank that will store the Ammonia and Nitrogen-Hydrogen mixture. The Ammonia will be in a liquid state while the rest will be gaseous.

III. Results

The model designed was validated by following the system created in the source called *Techno-economic evaluation of solar-based thermal energy storage systems* (3). In this source, the goal was to replicate the heating of water into steam with the temperate of 430C and a pressure of 10MPa. This source was able to turn that water into 190MW of energy. The other parameters are the 275C the nitrogen-hydrogen mixture is before the synthesis reactor, the input Ammonia before decomposition is 950C and 20 MPa, and a mass flow rate of 3.17*10^6 kg/hr. This Aspen model achieved this goal. The turbine does not produce 190MW, but the water does achieve the temperature and pressure required.

IV. Conclusion

A model was created in a program called Aspen to act as a tool in designing a closed-loop thermochemical energy storage system using Ammonia. The tool has been validated through a paper showcasing a closed-loop system. The battery of the system will be utilizing the endothermic decomposition and the exothermic synthesis of Ammonia. This tool should allow a group to simulate and help prepare in designing a closed-loop TES system. Ammonia being used as a source of energy would allow for long term storage and global distribution of the resulting power. This will be accomplished while decreasing the cost per kilowatt-hour of electricity while being almost entirely closed loop. This would allow for a better means of storage of solar energy.

Acknowledgment

We would like to thank Dr. Tariq Shamim, the Chair of the Northern Illinois University Mechanical Engineering Department, Curt Steele, the Technical Services Coordinator for NIU and Sandhya Chapagain, class TA.

References

1. *Lithium-Ion Battery*. Clean Energy Institute. Retrieved 2020, April 24th from https://www.cei.washington.edu/education/science-of-solar/battery-technology/

2. Chigier, N. A. (Ed.). (1982). *Progress in Energy and Combustion Science*. Pergamon Press.

3. Thaker, S., Oni, A. O., & Kumar, A. (2017). Techno-economic evaluation of solar-based thermal energy storage systems. *Energy Conversion and Management*, *153*, 423-434.