Development of a Heart Rate Monitoring System

J. Viduya[1], H. Hoffmann[2], S. Bukhari[2]
jviduya1@niu.edu, Z1833428@students.niu.edu, Syfian.bukhari@gmail.com
Biomedical Engineering[1], Electrical Engineering[2]
Northern Illinois University
DeKalb, IL

***Abstract* – The Heart Rate Monitoring System Prototype is designed to address grade school students conducting Science, Technology, Engineering and Math (STEM) activities. Dr. Pi-Sui Hsu of Northern Illinois University's College of Education is conducting a research project that monitors these students' anxiety levels. This device was created with the optimal cost and functionality needed for this research. The design implements feedback by inputting data from a pulse sensor and processing the data through an Arduino Nano. A beats per minute (BPM) calculation is made and sent to an excel file for storage and later analysis.**

I. Introduction

STEM related activities can be stressful for middle school students. Heart rate can be used to determine stress and anxiety levels. Smart wearable devices on the market today can be used to measure heart rate. However, they are extremely expensive and do not export the raw data needed. The goal of this project was to develop a heart rate monitoring system that is low cost and can measure the wearer's heart rate. The beats per minute of the wearer is exported to a computer. The BPM is then rechecked every two minutes. This will provide a longer and more accurate collection of data. The anticipated result is for one to interpret the data in order to know when someone is feeling anxious and needs help.

The client, Dr. Hsu, is an associate professor in the Educational Technology department at Northern Illinois University. Dr. Hsu has conducted research in the area of science and engineering education for middle school students. Six to eight grade school students are given science and engineering activities to work on and their anxiety levels are then observed. The anxiety levels can be monitored using heart rate. Biodots (stickers that change colors depending on stress level) are currently used to observe anxiety levels. This method relies only on a person's observation skills, which is not accurate or reliable enough to use in a research study. It would be far more accurate to use heart rate measurements to observe the students' anxiety levels because data is sent to the computer and stored for a more accurate observation for a later time.

It is important for the client to be able to wirelessly monitor the data while it is being recorded so she can observe it and intervene to help the students whenever they feel anxious. The data also need to be stored so they are available for analysis in the future. There are similar devices currently on the market that could also do this, but they are too expensive and do not provide raw data that can be analyzed and recorded. It is also ideal for this device to be cheaper than current devices on the market.

There are a few similar products on the market, most of them being fitness bands. The E4 wristband by Empatica is a wristband that measures heart rate and temperature among other things related to fitness [1]. The wristband uses a photoplethysmography sensor to measure blood volume pulse, which can be used to derive the heart rate. Another similar product is the Apple Watch Series 4 or later. It also uses photoplethysmography, like the E4 wristband. The Apple Watch uses green LED lights and light sensitive photodiodes to detect blood flow in the wrist. When the LED lights flash hundreds of times per second, the number of heart beats is calculated, which is the heart rate [3]. These devices are simply too expensive and do not provide live raw data to be analyzed.

II. Methods and Materials

A schematic diagram that shows all the components and how they are connected is shown in Figure 1. The design contains approximately 8 components: Arduino Nano board, pulse sensor, lithium ion battery, battery charger, HC-05 Bluetooth module, enclosure, power switch, and a wrist strap. These specific components were chosen to make the device as compact and efficient as possible.

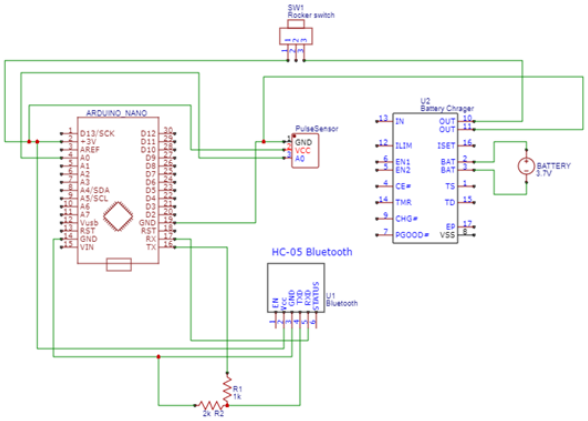

Figure 1: Schematic

The pulse sensor connects directly to the Arduino Nano board. The lithium ion battery is plugged into a charger which then connects to the Arduino's +3V and ground pins. A switch breaks up that wire connecting the battery charger to the voltage supply pin. This allows the power to the device to be turned on or off from the switch on the enclosure. An HC-05 Bluetooth module is used to connect the Arduino to a computer via Bluetooth. This allows the device to be worn wirelessly and thus limits the movement restrictions on the device. The connections needed between the Arduino and the HC-05 module are also shown in the schematic.

Once connected, all the components of the device are put into an enclosure. This is a 3D-printed enclosure which includes insets and holes for all the components to easily fit inside. Figure 2 shows what this enclosure looks like. The bottom of the enclosure sits on top of the wrist and is worn with a wrist strap.

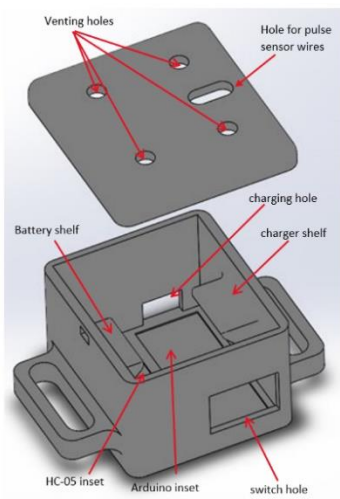

Figure 2: Enclosure

III. Results and Discussion

Figure 3 below represents the pulse waveform that is being inputted into the Arduino. The BPM is calculated by counting how many times the waveform passes through a set threshold in sixty seconds.

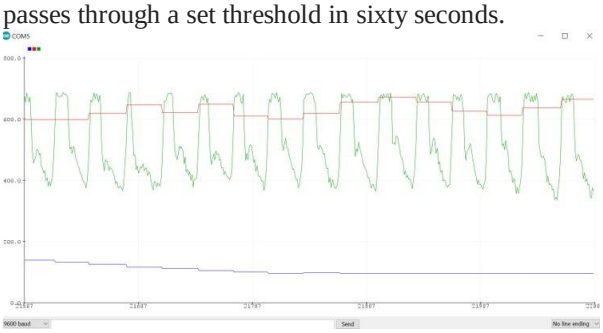
Figure 3: Pulse Waveform

Once the BPM is calculated, it is sent to an excel file along with information such as the date and time it was recorded. A sample depicting how the data is formatted into excel is shown in Figure 4. This BPM can then be used to calculate the stress level of the person wearing the device. Generally, the average heart rate is 60-100 BPM [2]. The higher your rate raises outside of its normal range, the more stress you are experiencing.

	A	B	C	D	E
1	Date	Time	BPM	IBI	raw data
2	4/16/2020	11:48:39 AM	78	1320	543
3	4/16/2020	11:49:09 AM	78	1320	555
4	4/16/2020	11:49:39 AM	78	1320	560
5	4/16/2020	11:50:09 AM	78	1320	553
6	4/16/2020	11:50:39 AM	78	1320	549
7	4/16/2020	11:51:09 AM	78	1320	545
8	4/16/2020	11:51:39 AM	78	1320	547
9	4/16/2020	11:52:09 AM	78	1320	515
10	4/16/2020	11:52:39 AM	78	1320	526
11	4/16/2020	11:53:09 AM	78	1320	525
12	4/16/2020	11:53:39 AM	78	1320	523
13	4/16/2020	11:54:09 AM	78	1320	496
14	4/16/2020	11:54:39 AM	78	1320	504
15	4/16/2020	11:55:09 AM	78	1320	529
16	4/16/2020	11:55:39 AM	78	1320	528
17	4/16/2020	11:56:09 AM	78	1320	518
18	4/16/2020	11:56:39 AM	78	1320	519
19	4/16/2020	11:57:09 AM	78	1320	523
20	4/16/2020	11:57:39 AM	78	1320	491
21	4/16/2020	11:58:09 AM	78	1320	496

Figure 4: Excel data

IV. Conclusion

A new low-cost heart rate monitoring system was developed to study anxiety levels for a research project. The device consists of a custom-made enclosure with a complete circuit to detect the pulse of the user. A data acquisition system, controlled by a microcontroller and software, was used to acquire the pulse signal and wirelessly transmit the data to the user's computer simultaneously. This newly developed system will be used in the client's research projects to study anxiety levels of grade school students soon.

Acknowledgement

The authors would like to acknowledge the support received from Dr. Lichuan Liu, Sonali Rawat, and Dr. Pi-Sui Hsu with the project.

References

[1] *E4 Wristband* [online]. Available from: https://www.empatica.com/research/e4/

[2] Harvard Medical School, & Fitbit Health Solutions. (2020, March 17). Why You Should Know Your Resting Heart Rate. Retrieved April 19, 2020, from https://healthsolutions.fitbit.com/blog/resting-heart-rate/

[3] "Your Heart Rate. What It Means, and Where on Apple Watch You'll Find It." *Apple Support*, 19 Sept. 2019, https://support.apple.com/en-us/HT204666.