GSM Enabled Sump Pump Failure Warning System

J. Berdell, H. Klimek, and J. Serena
College of Engineering and Engineering Technology
Department of Electrical Engineering, Northern Illinois University
1425 West Lincoln Hwy.
Dekalb, IL 60115

***Abstract*—The Sump Pump Failure Warning System is a GSM enabled IoT system that can communicate with its user anywhere in the world. It can inform the user to rising or falling water levels, monitor multiple locations within a property for power failures, diagnose pump switch failures, and keep track of warranty information regarding the pump itself. Moreover, it features broad coverage audio warning options and its battery backup system allows for automatic and permanent battery maintenance and several days of independent operation. Simplicity of use and a minimum of maintenance were core concepts of this design.**

I. Introduction

Unfortunately, severe weather events tend to be when a sump pump is needed most but are also when a sump pump is most likely to lose power due to outages. Even if a generator backup is available, the homeowner must be aware of the failure in order to act. Although it may seem like this is an unlikely event, storm damage and storm related flooding costs the United States $54 billion annually [1]. This fact is the motivation for this device, something that can allow the user to monitor their sump system remotely and will continue to function if the power to the house is lost. With a system like this, if power is lost or pumps are running abnormally, the homeowner will know about it no matter where they are. This is extremely important considering virtually no standard homeowners insurance plans cover damage caused by sump pump failures [2].

II. Methods and Materials

A. Overall System Design

This package contains two classes of devices referred to as modules, which interpret data, and sensors, which collect data. A module called the Sensor Module will be strapped to the evacuation pipe on the sump pump and collect data from sensors installed on the pump system. There are two external sensors, a water sensor for monitoring water levels in the pit, and a current sensor responsible for monitoring the current draw of the pump and checking for abnormal behavior. If either sensor detects something suspicious it will radio a second remote module called the Communications Module. This device handles cellular communications between the user and the Sensor Module. It will receive threat information from the Sensor Module and contact the user via the GSM network. Both modules carry audio warning systems for added coverage plus have onboard voltage sensors that monitor the home's electrical supply for any outages.

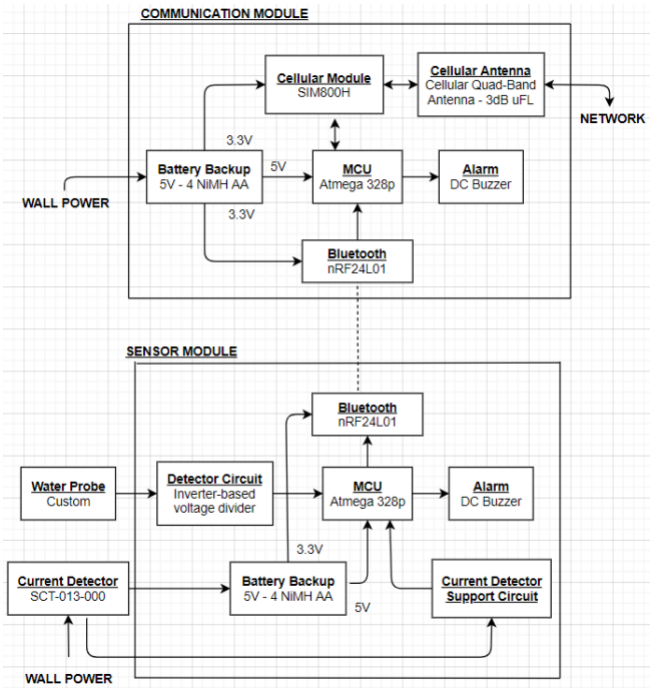

Figure 1: Complete block diagram of the design.

B. Water Sensor and Support Circuitry

The water sensor is a simple pair of conductor terminals set a fixed distance apart. This will create a roughly fixed resistance when the terminals are submerged in water and allows the water to act as one resistor in a voltage divider together with a resistor on the Sensor Module circuit board. The node between these resistances is the input to an inverter which supplies zero volts to the MCU Digital I/O when water is not present, and five volts to the MCU Digital I/O when water is present.

C. Current Sensor and Support Circuitry

In order to monitor the operation of the pump, an adapter was created that can split the power wires feeding the pump and measure the current draw over time. The power wire

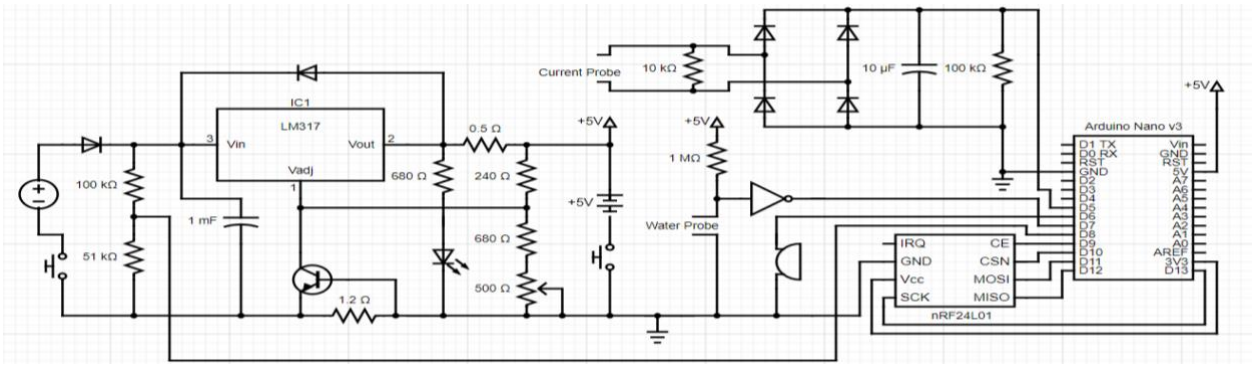

Figure 2: The circuit schematic for the Sensor Module.

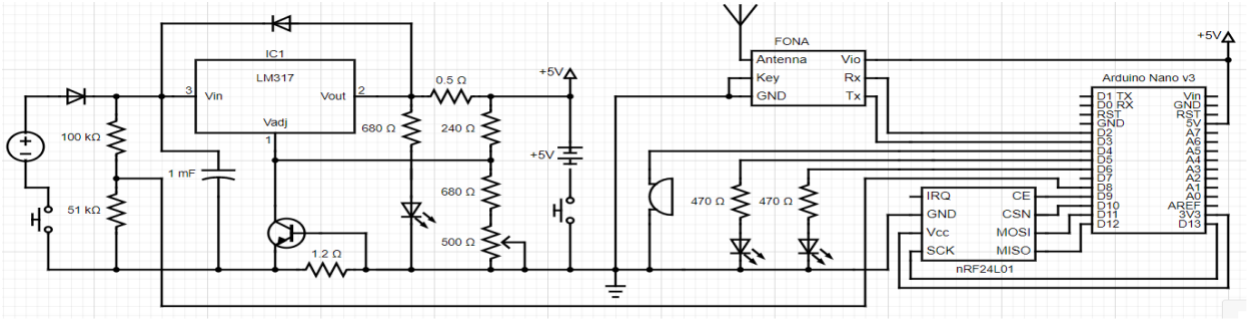

Figure 3: The circuit schematic for the Communications Module.

acts as the primary single-turn coil of a transformer inside a SCT-013-000 current clamp. The analog signal induced on the second winding is dropped across a burden resistor, then rectified and smoothed from a sixty hertz sine wave into a five volt digital signal.

D. Sensor Module

The Sensor Module (SM) is based around the Atmega 328p microcontroller. It is powered by four 1.2V nickel-metal hydride AA batteries that are maintained by an LM317 based float charging circuit. This system was chosen due to its simplicity and resilience to overcharging. The sensor support circuitry is also located on the SM. Additionally, the SM carries an nRF24L01 Bluetooth antenna responsible for communicating with the Communications Module. It also carries a buzzer for audio warnings and an internal voltage sensor for detecting power failures on the circuit it is plugged in to.

E. Communications Module

The final major component of this system is the Communications Module (CM). This board carries the same MCU, Bluetooth antenna, buzzer, and power system as the SM. The primary difference is that in place of the sensor support circuitry there is a SIM800 based 2G GSM chip for cellular communications. This device receives radio data from the SM describing the state of the sensors via Bluetooth. Then, when a threat state is detected, it sends a text message warning to the user's phone. Additionally, all information sent from the user to the device will be handled by the MCU on the CM.

III. Discussion and Results

After the prototype was complete, four primary phases of testing took place. Phase one consisted of over twenty-six hours of testing and saw a 95% success rate. Software improvements were made and over the subsequent three testing phases totaling over one hundred hours, and one thousand simulated detections, not one failure occurred.

IV. Conclusions

This system is reliable and most importantly it fills a need that many people experience. Further, development costs indicate that if this product were to be brought to market it could sell at a very reasonable price.

Acknowledgment

We would like to thank our faculty advisor Edward Miguel, our graduate assistant German Ibarra, and the College of Engineering and Engineering Technology for their constant positivity and support.

References

[1] Congress of the United States Congressional Budget Office. "Expected Costs of Damage From Hurricane Winds and Storm-Related Flooding." April, 2019 <cbo.gov>

[2] Illinois Insurance Association, "Does homeowners insurance pay when sump pump failure causes damage to a finished basement?," *illinoisinsurance.org.* [Online] [Cited: April 19, 2020.], available form World Wide Web.