Behavioral Tracking of Physical Activity in Small Social Rodents

Josue Medina[1] Fred Banuelos[2] Osvaldo Torres[1]
Mechanical Engineering[1] and Electrical Engineering[2]
Northern Illinois University College of Engineering and Engineering Technology
1425 Lincoln Hwy
Dekalb, IL 60115

***Abstract*—Stress is an emotional or physical response that all humans will deal within their lives. There are different ways that humans will cope with stress, an example exercising. One way to study this phenomenon is to observe a group of homogenous mammals such as the prairie voles. Prairie voles are unique mammals that share social behaviors with humans such as living in family groups, forming social bonds, and they respond negatively to social stress. These rodents provide a valuable model to study the interactions of social behaviors and exercise in humans. The current laboratory setting consists two prairie voles in the same cage that mimic their natural habitat. The cage contains a running wheel with a cyclo-computer attached to measure the distance as the wheel is being used by the prairie voles. However, it does not differentiate between which prairie vole is using the wheel. Our device will differentiate between which of the two prairie voles is using the wheel at any given time and provide the data needed for further study. The device contains a Raspberry Pi 4 Model B that will have a Parallax RFID and a hall effect sensor attached to it. The RFID will identify between the prairie voles with a specific tag attached on them. The hall sensor is used to measure the distance that each prairie vole performs every time one of them gets on the wheel. The data will be collected onto a USB drive that is connected directly to the Raspberry pi. Ultimately, this device will provide critical data to the user with the knowledge of which prairie voles is being active.**

I. INTRODUCTION

In everyday life humans experience stress. Stress ranges from different aspects of life whether it is from work, school, and even from everyday interaction with other people. This type of stress is called social stress. It refers to the strain that is formed from one's relationships and social environment. It causes serious consequences on quality of life, emotion, and physical health. In fact, it is one of the most common types of stress in society.

A strategy to cope with stress is to exercise. Humans are complex and contribute to many factors that it is difficult to study how exercise benefits them. However, there are small mammals that share some attributes to humans. They are the prairie voles. These animals are monogamous meaning they from bonds that last their lifetime. More importantly, they crave social contact and when it is not presented to them, they become socially stressed. This makes them an ideal model to observe on a smaller scale. Dr. Angela Grippo, from the Department of Psychology at Northern Illinois University, NIU, is researching how prairie voles provide valuable information on their interactions of social behaviors and exercise. Two prairie voles are put into the same cage with two running wheels. Then they are observed to collect the data needed. The data is to know when the prairie voles use the wheel, which of the two is using the wheel, at what distance did each traveled during the running session, and the total distanced traveled in 24 hours. All this information was originally collected by someone constantly watching the prairie voles. This method would take up valuable time on research.

II. MATERIALS AND MEHTODS

The system is design around the Raspberry Pi Model B which is ideal to incorporate a Parallax RFID and a hall effect sensor because of its general-purpose input/output (GPIO). To identify the prairie voles, Parallax RFID tags are put on the voles with a collar. The use of the hall sensor will measure the rotations per minute (rpm) of the wheel which, with some simple calculations, can provide the distance traveled while running on the wheel. In order to implement these components, a design was built for the safety of the prairie voles. The cage and the running are provided by the client and this prototype was designed around it. Fig 1 provides the assembled prototype; Fig 2 provides a close-up of the hall sensor (black component) with the magnet (red component); and Fig 3 demonstrates how the components are assembled.

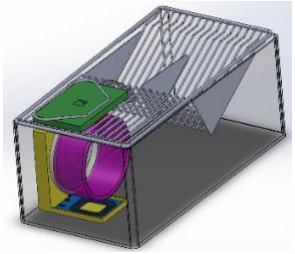

Fig. 1. Assembled PROTO

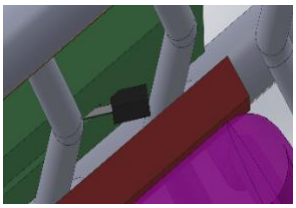

Fig. 2. Close-up

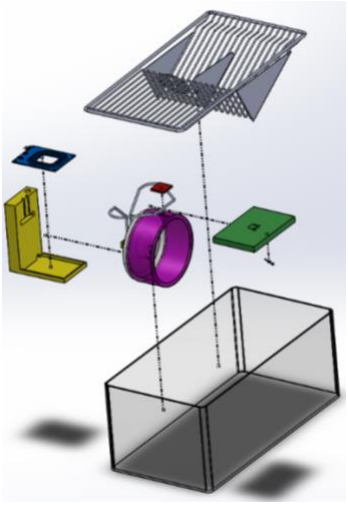

Fig. 3. Exploded View

The blue component is the RFID which is then set on the "Parallax Frame" (yellow component) which is 3D printed. This "Frame" is designed to have the wires feed inside of it to prevent the prairie voles from being exposed to the wires connecting the RFID and the raspberry pi. The green component is a "hall sensor guide", which is also 3D printed, that helps guide the hall sensor to be away from prairie voles reach. It also provides a space at the bottom of the wheel for the RFID to fit. The hall sensor is attached to green component and needs to be close to the magnet to measure the rotations of the wheel (about 1" of clearance).

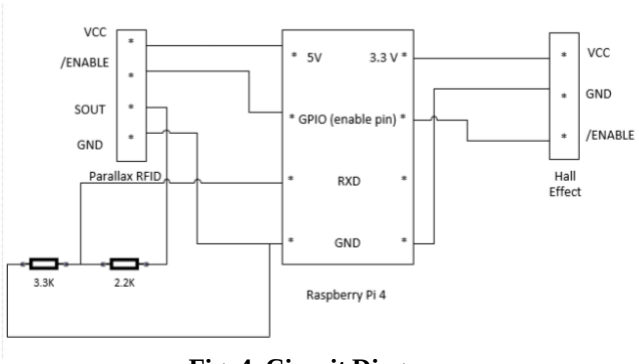

Fig. 4. Circuit Diagram

In Fig.4 the RFID power input (VCC) and Ground (GND) are plugged into the 5 volts and ground rails on the breadboard, respectively. We have an option to choose any of the GPIO pins for the /ENABLE, except the RXD serial port pin. We need the RXD to read data coming from the serial port. The wire hooked up to the SOUT pin runs through a voltage divider that will reduce the +5v coming out of the reader to around the +3v range that the RFID takes. You risk damaging your Pi if you put higher voltages than it is rated for into the GPIO. We used a 2200-ohm resistor and a 3300-ohm resistor which should reduce 5 volts down to about 3 volts. For the hall effect sensor, we have VCC running to the 3.3V source and GND running to the GND pin. The /ENABLE for the hall effect sensor can also go into any GPIO pin.

III. Results and Discussions

A. *Projected Results*

The projected results were to identity which of two prairie voles in a cage was running and collect the distance they would travel on the wheel in 24 hours. However, due to the Covid-19 pandemic it has limited us with resources to test a fully functional prototype with the prairie voles. Moreover, the RFID was damaged during programming/assembly and was difficult to replace. We were able to develop a code to record the distance when the wheel is being used. There is, however, a final python code for the raspberry pi that would need to be tested when applicable.

B. *Actual Results*

The current results provide the user with the distance traveled each time the wheel is used. It will also output the total distance the wheel has accumulated throughout the day. Fig. 5 provides a sample data of testing this current prototype code which is access via USB storage device connected directly to the raspberry pi.

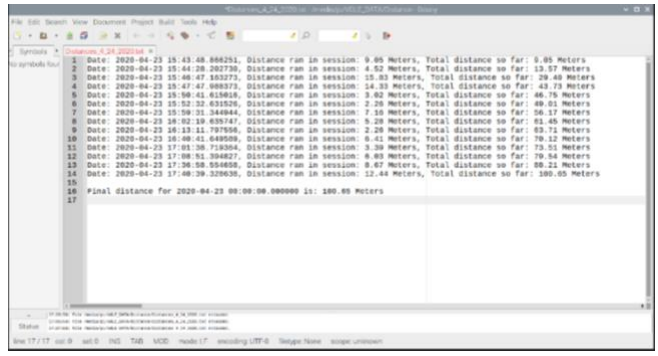

Fig. 5. Data output

As seen above, it outputs the date and time for when the wheel began spinning. It also shows the distance of the running session, and the total distance thus far. At midnight, it will give the total distance of that day and will repeat everyday for as long as the device has power.

IV. Conclusion

This device is design to help our client, Dr. Grippo, to further study these interesting rodents. It would help quantify the information over a desired period. Unfortunately, due to the Covide-19 pandemic, resources and access to the prairie vole was limit or not accessible. However, there is a prototype code that could be tested at a future, more normal, time. The current code/prototype will provide the distance needed for further research.

Acknowledgment

We would like to thank close friends and former alumni that provided us with knowledge that helped made this project progress. Diego Real and Michel Gomez. We are also thankful for German Ibarra, NIU Senior Design Teacher Assistant, and Dr. Mansoor Alam, NIU Faculty Advisor, for their guidance in this project.

References

[1] "Hall Effect Sensor and How Magnet Make It Works." Basic Electronis Tutorials, 9 Feb. 2018, https://www.electronics-tutorials.ws/electromagnetism/hall-effect.html.

[2] TheMagPi. (1969, January1). Raspberry Pi 4, 3A, Zero W – specs,benchmarks & thermal tests. Retrieved from https://magpi.raspberrypi.org/articles/raspberry-pi-specs-benchmarks.

[3] Kenkel, W. M., & Carter, C. S. (2016, January 1). Voluntary exercise facilitates pair-bonding in male prairie voles. Retrieved

[4] Sanjeev, Arvind. "How to Use a Hall Effect Sensor With Arduino : Arduino." Maker Pro, Maker Pro, 8 Nov. 2019, https://maker.pro/arduino/tutorial/how-to-use-a-hall-effect-sensor-with-arudino.