Portable Take-home Device for Measuring and Recording Vital Signs of Patients.

K. Kirk, N. Lollini, M. Senica
Department of Mechanical & Electrical Engineering, Northern Illinois University, DeKalb, IL 60115.

***Abstract* - Vital signs are very important to all medical patients and they are the simplest way to assess one's health. Implementing a device that mimics routine vital-monitoring could change the medical industry. Patients could live their lives as if nothing was wrong with them while being under constant medical supervision. This device would be able to send real-time data from the vitals stated above to medical professionals via wifi. The device will be non invasive and compact while also being smooth and sleek in appearance. The portable vitals box integrates a thermopile, a Photoplethysmogram and Electrocardiogram, and a linear strain gage. The integrated sensors will be able to measure and read temperature, heart-rate, blood pressure, oxygen saturation, and respiration rate; all while sending the recorded data to a mobile app via bluetooth or wifi.**

I. INTRODUCTION

Everyday around the world there are people who need medical attention, in a hospital, at home, or in a remote area without electricity; With the need for medical attention also requires medical services, specifically some of the general practices that are often overlooked. The Take-Home Vitals Box will be used to take five vitals from a patient and send their information via WIFI or cellular data to a hospital where they will be closely watched over. Five vitals will be monitored, and they are heart rate, respiratory rate, temperature, blood pressure, and oxygen saturation.

The goal is to monitor the patients' health without interfering with their everyday life; This includes things such as doing chores around the house to even being able to go to work while the device is in use. It may also help discover and better understand strange medical phenomenons [1]. The Vitals Box can read and record the listed vitals, store the results, and also send the data wirelessly to a mobile app or laptop. To be able to monitor patients in the comfort of their own home and not take up resources and space at a hospital will change healthcare.

II. DESIGN FEATURES

The device will be worn on the patient's upper arm and must be as minimally invasive as possible. There is no age restriction on the device, but it is marketed towards those who have poorer health and require constant trips to the hospital or doctor.. To achieve these goals at least five separate sensors are required to record the vital signs. The sensors must not do more than make contact with the person's skin and must be compact to keep the overall size of the device minimal.

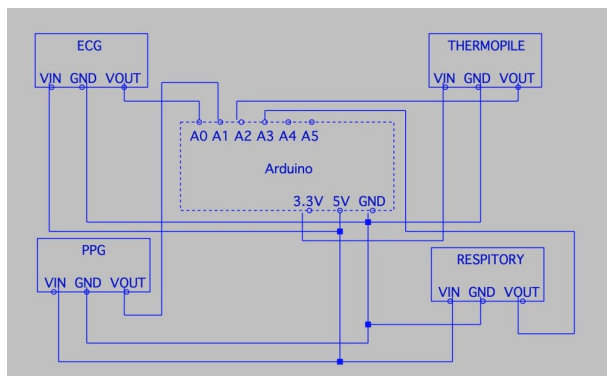

Fig. 1. Components overview for the Smart Vitals Box.

A. Sensors and Microcontroller

The entire system will be programmed and controlled by an Arduino Uno microcontroller, which supplies 5 volts to the sensors and hardware and through some electromechanical means gets transduced into an output voltage. The Arduino will then take the input voltages from each sensor separately to interpret the data into different data, corresponding to each individual sensor and vital sign. Any additional circuitry that is required for the sensors will also be incorporated into the PCB. All sensors are integrated using multiplexing; each reading will output its own specific plot.

A ZTP101T thermopile will be used to read the patient's temperature. Blood pressure will be calculated using the MAX 86150 three-in-one device. The ECG will require the patient to hold their finger on the finger pad to read heart rate. The pulse-oximeter(PPG) will also require the patient to put their finger to the device, or use two electrode pads, to read

the oxygen saturation levels along with heart rate. Strain gauges will be used to read respiratory rate by measuring the amount the diaphragm expands [2]. Incorporating a blood pressure sensor into the device differentiates The Take-Home Vitals Box from products that are already on the market. Although there are few of its kind not one has a way to measure blood pressure. The device is expected to have a battery life of around two days. This will minimize the amount of down time for the device and lower the amount of time the patient is stuck next to an outlet. Using an alternative method for power was not feasible for the given time so using a lithium battery with a long run time was the best option. All sensors must have an accuracy of one-tenth of a percentage to follow medical quality.

B. Power Supply

To power the take-home vitals box a rechargeable battery system was used. Two 3.7V lithium ion batteries were used each capable of 2200 mAh. This allows the device to run all day while supplying a minimum of 5 volts to the device.

C. Housing

The Vitals box will be strapped in place to one's upper arm, with adjustable velcro straps. In this location the strain gage and the thermopile will be the only sensors that are not encased in the housing. The placement on the arm allows easy access to the device, and allows the thermopile and strain gage to access their specific spots on the body; ribcage and ear.

D. Wireless Bluetooth Capabilities

The Vitals box will be attached wirelessly to the patients left or right arm. Data on the patient's vitals will take place via bluetooth. A HC-06 chip is placed in the lid of the device allowing the Arduino to communicate with a serial monitor on an Android device or PC.

III. TESTING/EXPERIMENTATION

Fig. 2. ECG Waveform plot, mV vs time(secs), measuring heart-rate.

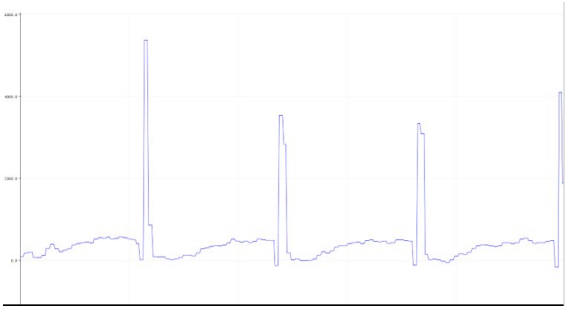

In order to test the accuracy of the system a set of experiments were conducted using the scientific method. Most sensors required some calibration converting raw analog data into meaningful measurements. Calibrating the infrared(IR) sensor used for reading body temperature was done using thermocouple readings on a common heat source. Thermocouple readings were compared to IR readings creating a linear relationship. A similar method would have been used with strain gauges for the respiratory device.

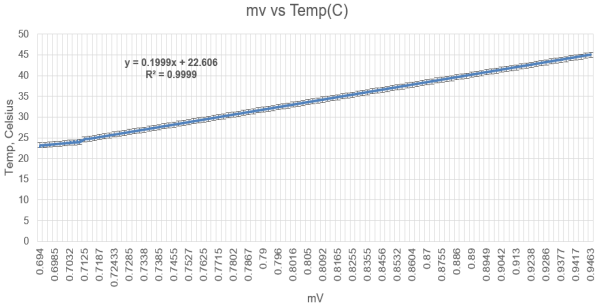

Fig. 3. Is the calibration of the Thermopile, showing the linear-like slope of millivolts to the recorded temperature in Celsius.

IV. CONCLUSION

Progress has been made to produce 4 different output plots that all vary depending on the recorded values; the outputs of the ECG, PPG, respiration rate, and heart rate. Blood pressure will not have a plot, but will be measured. The device will be able to send information on patient's vitals wirelessly, but the intended application for the Vitals box is domestic use.The data can be documented and potentially find any underlying issues before they become a problem. The low cost of the components means that the product can be manufactured for cheaper than current products on the market sitting around only $100 for the entire device. The ability to mass produce the Take-Home Vitals box means that it can be distributed to the places that need them the most due to lack of medical personnel, and resources.

ACKNOWLEDGMENTS

The authors would like to thank Dr. Venumadhav Korampally with the Department of Electrical Engineering and Dr. Donald Peterson with the College of Engineering and Engineering Tech at Northern Illinois University for their technical and financial assistance.

REFERENCES

[1] Coronel, R., Spaan, J.A. & Voigt, H.F. Med Biol Eng Comput (2011) 49: 1. https://doi.org/10.1007/s11517-010-0723-x

[2] Chu, M., Nguyen, T., Pandey, V. et al. Respiration rate and volume measurements using wearable strain sensors. npj Digital Med 2, 8 (2019)doi:10.1038/s41746-019-0083-3