Extinction Monitor Entrance Collimator Mounting and Critical Lift

C. Becker, A. Hamdan, and R. McManus

Department of Mechanical Engineering, Northern Illinois University, Dekalb, IL 60115

***Abstract*- The Mu2e experiment could prove to be a monumental discovery for all of mankind due to the observation of muon to electron conversion. An extinction monitor is necessary to ensure that the proton beam fired is converted completely to muons. Since the proton beam has not been adequately mapped, adjustment and mounting of the entrance collimator component of the extinction monitor is required. Solidworks modeling, Ansys simulations, and hand calculations were completed to develop a design that could achieve this. Stresses and deflections were determined to ensure compliance with FESHM, ASME, and ANSI standards. An optimal design was selected, and the components of said design were deemed appropriate for the application.**

I. Introduction

The grander scale of the senior design project is Mu2e itself. Negatively charged muons normally decay into neutrinos and electrons. However, there is an event that occurs once every one hundred quadrillion times, where a negatively charged muon will decay into only an electron. Mu2e's purpose is to observe the pure muon to electron transition[1].

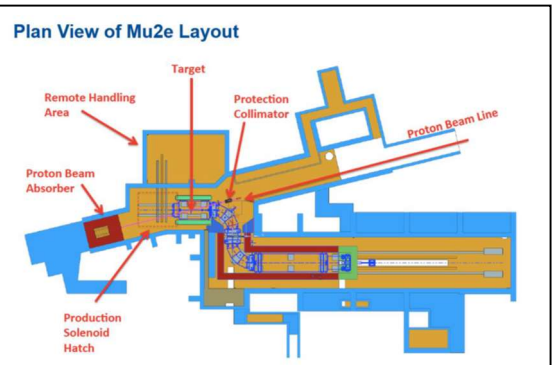

Figure 1: Layout of Mu2e/ Location of Extinction Monitor

As shown in Figure 1, the main location of interest for purposes of this project is The Proton Beam Absorber. The beam will be fired in pulses in order for the Mu2e experiment to be executed successfully [1]. As such, it is crucial to ensure that there are no remaining protons between each pulse. The Extinction Monitor provides a means to monitor the proton beam between pulses in order to ensure that proton extinction occurs. As the Extinction Monitor is tracking the proton beam, it is essential not only to have a means to lift the entrance collimator and hold it in place, but to be able to aim the EM at the beam. The proton beam's exact location will not be able to be mapped until later in Mu2e's project construction. As such, an adjustment of +/- 2 " (51 mm) in all directions will be required.

The purpose of this project is to provide an engineering note containing a series of detailed drawings and analysis of the mount required for Fermilab to utilize for procurement and installation of the EM entrance collimator. A modified installation plan and requirements document have been completed in addition.

II. Methodology

For the critical lift and installation of the entrance collimator to be implemented effectively, a series of sub-systems were designed to allow for the minimal space and heavy load lifting requirements of the procedure. Figure 2 shows all of the subsystems working in unison to install the collimator in the nominal position. The final location entails the upstream flange being flush with the Extinction Monitor Magnet Room wall. The nominal angle is placed 9.7° below the horizontal plane. A series of cables and pulleys attached to an overhead hoist trolley system on the downstream end (a) will have the capability of vertical and horizontal adjustment. A

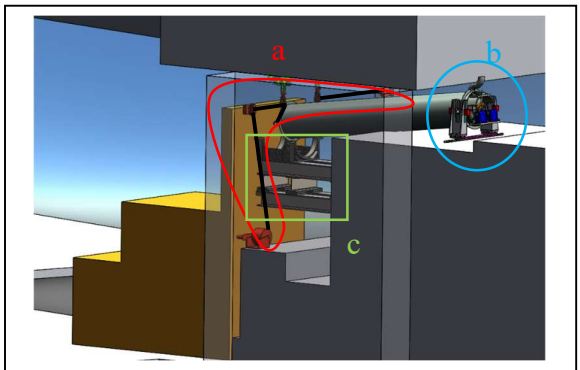

Figure 2: Overview of Installation

pivoting assembly on a rail (b) will secure the upstream lifting lugs of the entrance collimator with the upper portion of the assembly and will have enough degrees of freedom to allow for the downstream adjustment. The collimator will arrive on a holder subsystem (c) which allows for the collimator to be lifted in place by a forklift and shift the center of gravity over the forks. The forklift in question is a CGC70 with fork extensions and fork positioner [2]. The CGC70 is deemed to be safe for the application based on the load center of 42" (1067 mm) needing to be lifted 162" (4115 mm).

The collimator will have a weight of 5200 lbs (23.1 kN) prior to installation. After the nominal position and angle have been achieved, and the proper adjustment has been made, steel shot will be poured into an internal cavity in the collimator. The steel shot pour will increase the weight to 8200 lbs (36.5 kN) [3]. Further analysis will show that all subsystems will be sufficient for the critical lift according to Fermilab Environmental and Safety Hazards Manual (FESHM), ASME, and ANSI safety codes [4-8].

III. Results

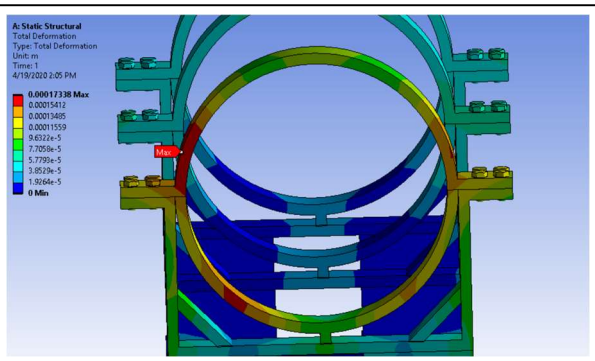

Figure 3: Sample Deformation Simulation

Analyses such as the Ansys simulations shown in Figures 3 and 4 show that the proposed subsystems will accommodate the task due to the deflection being under 1mm(Figure 3) or the stress being under 92 MPa (Figure 4). Details on the analyses can be found in the final report. All components either have a manufacturer's rating or have stresses found in analyses that are under the limits set by ASME, FESHM, and ANSI safety standards [4-8].

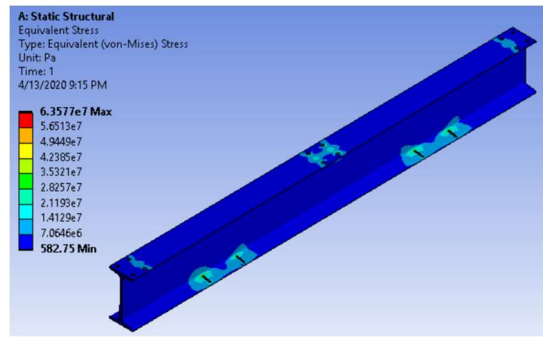

Figure 4: Sample Ansys Stress Simulation

IV. Conclusion

Overall, the design was proven to be acceptable for the desired task of critical lifting. All subsystems were accepted by a Fermilab design committee.

Acknowledgements

We would like to thank Nicholas Pohlman (PhD), Jifu Tan (PhD), Matthew Kleszynski (Teaching Assistant), Christine Ader (Mechanical Engineer), Dan Vrbos (Mechanical Engineer), and Peter Kasper (Senior Scientist) for their contributions is assisting with and critiquing the design.

References

[1] (Ginter, 2016), Fermilab Engineering Manual

[2] CGC40 through CGC70 Spec Sheet. Clark Material Handling Co. 2008

[3] Structural Analysis of Mu2e Entrance Collimator Shell. Z. Tang. Rev Jan 2020

[4] ASME B30.2 – Overhead and Gantry Cranes

[5] ASME B30.16- Cranes and Vertical Hoists

[6] ASME B30.11- Monorails and Underhung Cranes- Safety Standard for Cableways, Cranes, Derricks, Hoists, Hooks, Jacks, and Slings.

[7] ANSI MH27.1- Specifications for Patented Track Underhung Cranes and Monorail Systems. 2003

[8] FESHM 7080: Concrete Anchor Devices. C Ader. ES&H Manual. Dec 2016